HIRD

Est. 1983
Celebrating **40 Years**

www.hird.co.uk

GML Mini 300

Counterbalance Floor Crane

The GML Mini 300 features a compact footprint while delivering an impressive lifting capacity of up to 340kg to a maximum lifting height of up to 4m.

- SWL of up to 340kg in a 2-mast configuration
- Working Height 4m*
- Crane Boom
- Forks
- Compact working & transportation positions
- Low loading height



GML Mini Forks



GML Mini
with Vacuum Lifter

*Figures/dimensions are subject to change and testing.

318-340kg

Technical Specification		w/ 2-masts	w/ 3-masts
Capacity		340kg	318kg
Working Height	flat forks up	2,800mm	3,800mm
	flat forks down	2,220mm	3,220mm
	crane boom	3,000mm	4,000mm
Width		750mm	750mm
Length	(working with forks)	1,740mm	1,740mm
Weight	dead weight - lift only	139kg	156kg
	inc. flat forks & crane boom	335kg	352kg
Power		Manual	Manual

Dimensions (mm)

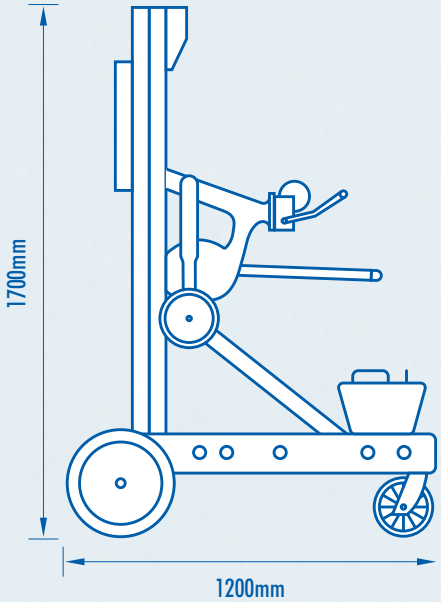

HIRD TRAINING LEEA - Counterbalance floor crane

LEEA

Product specifications are subject to change without notice or obligation.
The photographs and/or drawings in this document are for illustrative purposes only.

Northern 01482 227333
Central 01302 341659
Southern 0203 174 0658