HIRD

www.hird.co.uk

OPERATORS MANUAL

UNIC SPIDER CRANE
URW-095

Northern (Head Office)
Tel: +44 (0)1482 227333

Central
Tel: +44 (0)1302 341659

Western
Tel: +44 (0)1384 900388

Southern
Tel: +44 (0)203 174 0658

DISCLAIMER - ALL INSTRUCTIONS ARE SUPPLIED FROM MANUFACTURER AND WHERE CORRECT AT TIME OF PRINT

OM 1706-2

Introduction

Instructions for crane operators

This operator's manual contains correct operational procedures plus simple servicing and inspection instructions for the UNIC crane

Make sure you read this manual and only operate the crane after you have fully understood it.

Although we take all possible measures to ensure the quality of the crane and all accompanying literature, please contact UNIC Cranes Europe Ltd if you have a query.

When making enquiries, or ordering spare parts or requesting repairs please ensure that you have the model number, specification (if applicable), serial number and date of manufacture available to speed the process.

All of this information is available on the data plate on the side of the kingpost.

All illustrations and operating procedures are based on the URW 295 CR unless otherwise stated.

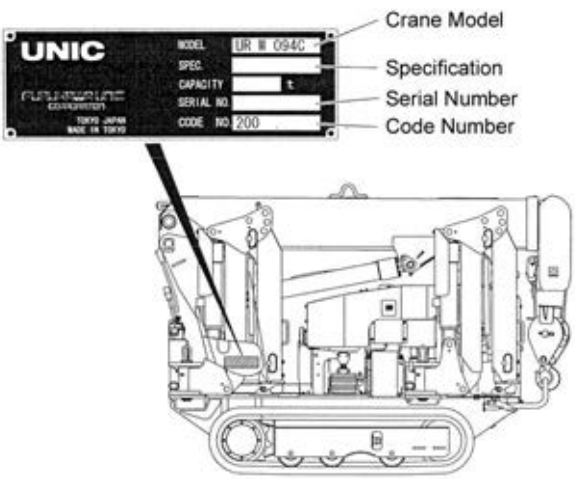

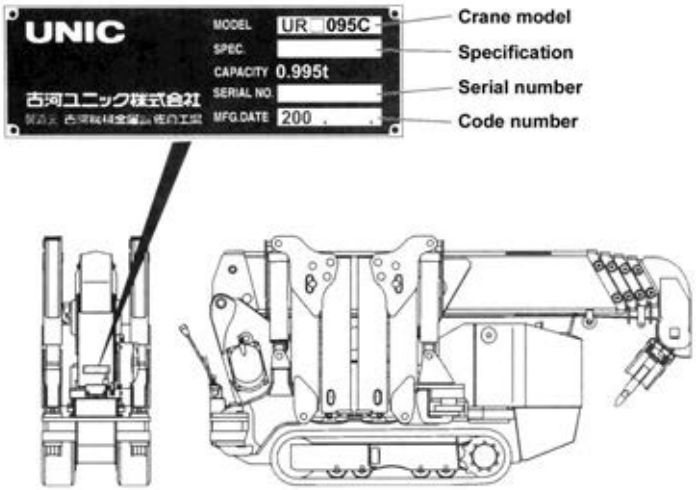

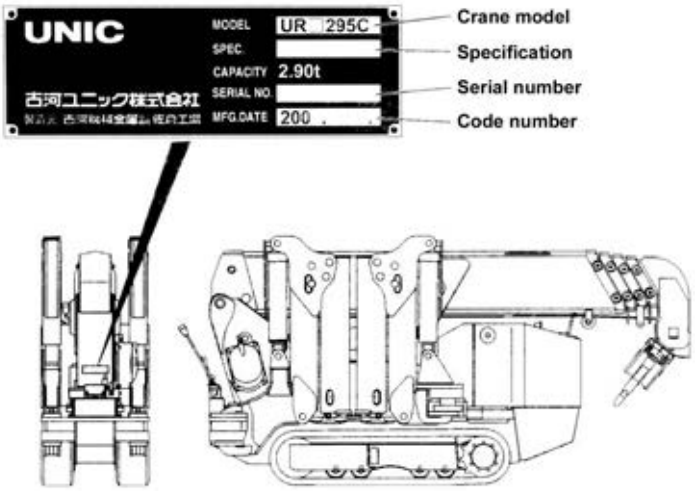

TABLE OF CONTENTS

1 SAFETY INSTRUCTIONS
a. Instructions to operators
b. On and Offloading
c. Important Points of Notice – Differences between URW094C, URW095CR, URW095CR(E) and URW295C

2 SAFETY INSTRUCTIONS FOR CARRIER OPERATIONS
a. Before operation
b. During operation
c. Loading and unloading
d. After operation

3 SAFETY INSTRUCTIONS FOR CRANE OPERATIONS
a. Before operation
b. During operation
c. After operation

4 DESCRIPTION OF CARRIER EQUIPMENT

5 DESCRIPTION OF CRANE EQUIPMENT

6 INFORMATION PLATES
a. Position of information plates

7 DEFINITION OF TERMS
a. Outrigger extension
b. How booms are extended
c. Rated load
d. Rated total load
e. Hoisting loads
f. Working radius
g. Boom length
h. Boom angle
i. Lift above ground

8 HOW TO REFER TO WORKING RANGE CHART AND RATED LOAD CHART FOR EMPTY VEHICLE
a. Working range chart
b. Rated Load Chart URW094C
c. Rated Load Chart URW095C
d. Rated Load Chart URW295C
e. Rated Load Chart – Searcher Hook 095/295

9 DESCRIPTION OF CONTROLS
a. Overwinding alarm
b. Automatic overwinding Stop
c. Load indicator
d. Warning horn
e. Hook safety catch
f. Automatic stop for minimum 'wire on drum'
g. Remote control (overview)
h. Voice announcement system

10 CARRIER OPERATIONS
a. Designation and location of control levers
b. Before operations
c. Operation
d. Crawling operations

11 CRANE OPERATIONS
a. Designation and location of control levers
b. Before operations
c. Outrigger set-up procedures
d. Boom derricking operations
e. Hook operation
f. Boom telescoping
g. Slewing operations
h. Storing the boom
i. Hook stowage
j. Storing the outriggers

12 INSPECTION AND MAINTENANCE OF THE CARRIER
a. Pre-use inspection
b. Periodic inspection – 250 hours or 3 monthly
c. Storage

13 INSPECTION AND MAINTENANCE OF CRANE
a. Pre-use inspection
b. Cleaning
c. Inspection of slew bearing mounting bolts
d. Wire rope replacement
e. Replacement of wearing parts

14 CARRIER LUBRICATION
a. Precautions when carrying out lubrication
b. Recommended lubricants
c. Lubrication chart

15 CRANE LUBRICATION
a. Precautions when carrying out lubrication
b. Recommended lubricant
c. Lubrication chart
d. Lubrication

16 MAJOR SPECIFICATIONS
a. URW094C
b. 094C Outrigger Plans & Working Range Chart
c. 094 Rated Load Chart
d. URW095C & URW295C
e. 095C & 295C Outrigger Plans & Working Range Chart
f. 095 Rated Load Chart
g. 295 Rated Load Chart
h. Additional information for Cranes with Electric Pack CR(E)
i. How to use Searcher Hook
j. How to Store Searcher Hook

17 REMOTE CONTROL
a. Operations Manual

18 LOAD METER (094 and *095 only*) AND RATED CAPACITY INDICATOR (*295 only*)
a. Load Meter Operation
b. Rated Capacity Indicator Operation

19 CERTIFICATION

a. EC Declaration of Conformity
b. EC Type Examination Certificate
c. Certificate of Adequacy
d. Certificate of Test for Electromagnetic Compatibility
e. Certificate of Test and Examination of Hook
f. Certificate of Strength of Wire Rope
g. Report of Thorough Examination
h. Certificate of Test

1 SAFETY INSTRUCTIONS

a. Instructions to operators

- The UNIC 094C/095C/295C is designed in accordance with all relevant European safety regulations. However, operating errors and misuse will result in hazards:

  i. to the life of the operator and others;
  ii. to the lifter and materials of the company and others;
  iii. to the correct and efficient operation of the device.

- Only personnel who have received adequate familiarisation may operate this machine

- All persons involved with the set-up, operation and maintenance of the machine must read and observe the following instructions. The personal safety of yourselves and others that may encroach upon your operation is at stake.

- Always observe prohibition and hazard signs as explained in this manual. Failure to do so could lead to serious injury or death to the operator or others. Additionally damage to the crane or surrounding area.

- Always make sure that this manual is available to the operator

- Unauthorised alteration to the structure or operational controls of the device is prohibited for safety reasons. If alteration of the crane is required contact UNIC Cranes Europe Ltd

- Intended use also requires observance of the operating manual and adherence to the conditions for inspection and maintenance.

- Only operate the UNIC 094C/095C/295C under the correct environmental conditions, to do otherwise jeopardises health and safety, and will invalidate the Report of Thorough Examination and any warranties still in force.

- The crane must only be operated within the limits of the Working Range Chart and Rated Load Chart.

Explanation of symbols used in this manual

	Prohibition: DO NOT carry out		**NO SMOKING or naked flames**
	General Hazard: Be very cautious	**NB**	**Operational notes**
	Highly Flammable		**Toxic Substances**

b. ***<u>On an off loading</u>***

- When on and offloading a crane use only the designated lifting points. No other part of the crane must be used for securing any lifting attachments or accessories as this may lead to serious injury or death of the operator and/or damage to the crane

- Always ensure that the shackles that are used for lifting the crane is of the correct size and capacity. Using the wrong size or capacity can lead to failure of the shackle or lifting point. This is potentially fatal.

- On and offloading must always be carried out by a person authorised to carry out this work. Once loaded the crane must be checked for secure attachment to the transport vehicle, prior to moving off. This is the responsibility of the transport vehicle driver.

- When a loading ramp is used which is not an integral part of the transport vehicle, it must be sufficiently strong to bear the gross weight of the crane. The ramp must be at least four times as long as the height from the floor to the load bed of the transport vehicle. For further information see the sticker on the crane.

- The illustrations show the lifting positions for all crane models.

Illustration A
094 CER

Illustration B
095/295 CR

Illustration C
095/295 CR(E)
with Electric Pack

c. Important Points of Note between URW094, URW095 & URW295

This section provides additional information for operators. This is of great importance to personnel who may have operated the UNIC URW 295C mini crawler crane. Although the URW 095C is based on, and is visually very similar to, the URW 295C there are some extremely critical differences that must be understood before operating this crane.

i. Outrigger Settings

On the URW 295C there is only one horizontal position that the legs can be set in:

50° at the Rear (Kingpost end) and 55° at the Front (Operator end). This is referred to as the **Standard Position**

The outriggers on the URW 094C/095C may be set independently in a number of horizontal positions. Obviously, any change from the Standard Position will affect the stability and operational area of the crane.

If any changes are made from Standard Position, then reference must be made to the 'Prohibited Area of Operations' sticker on the crane to determine where lifting is allowed.

UNDER NO CIRCUMSTANCES MAY LIFTING OPERATIONS TAKE PLACE IN AN AREA DESIGNATED AS PROHIBITED (ORANGE ARC) ON THE STICKER. NOT EVEN IN AN EMERGENCY

ii. Load Meter

The function of the load meter on the URW 295C is provided by the Safe Load Indicator(SLI). The URW 094C/095C does not have an SLI fitted, therefore you may try to determine the load on the hook by use of the Load Meter. **DO NOT** rely upon this method as it can give an extreme approximation of the load. The only accurate way is to correctly determine the weight of the load before lifting commences.

iii. Control Levers

The control levers on the URW 094CERand 095CR are in a flat configuration unlike the upright configuration of the URW095CR(E) and URW 295C Series.

Intentionally Blank

2 SAFETY PRECAUTIONS FOR CARRIER OPERATIONS

a. Before operation

- Always wear correct PPE for the task. Do not wear loose or torn clothing as this may cause a hazard with rotating machinery or wire rope. If wearing loose jewellery or long hair, take additional precautions to ensure that it cannot come into contact with moving machine parts.

- Carry out pre-use inspection. If a defect is found, do not carry on the operation until it has been rectified.

- Ensure all safety covers are correctly fitted. Failure to do so may leave moving machinery exposed.

- The engine must be stopped with the ignition turned off before re-fuelling or lubrication can commence. Remove all naked flame and incandescent heat sources from area.

- Do not operate the machine inside buildings using petrol option without adequate ventilation. To do so will cause carbon monoxide poisoning and eventual death.

- Move the 'crane-crawl' lever to crawl or the travel position. This allows the driving control levers to move and engages the crawl function. No crane operations can function with the interlock in this position.

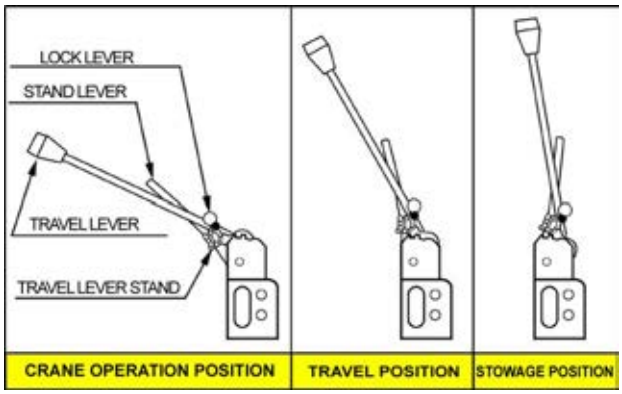

b. *During operation*

- Due to the small size of the carrier, the overall crane has a high centre of gravity. Particular care must be taken when crossing uneven ground, otherwise the crane may turn over.

- When crawling, the outriggers must be stowed and locked.

- The crane must not be moved with a load suspended on the hook or without the hook being stowed correctly. The boom must be fully retracted and stowed correctly

- When travelling over rough ground ensure that the crane is being driven slowly.

- Do not run the crane over bumpy area, lying rocks with sharp edges, rough solid rock, small broken stones, edges of steel plate, steel bars for reinforcement, scrap metals, and waste materials on a road such as in riverside where covered with many stones which may remarkably shorten service lift of rubber tracks.

- Where there are bumps or depressions, ensure that the crane is driven directly at them to minimise any stress to the carrier chassis caused by twisting.

- Make sure a board is used where the crane has to go over a vertical rise of more than 150mm.

- Do not abruptly change course on a slope. Avoid crossing a slope.

- When parking on a slope ensure that the tracks are adequately chocked.

- Do not attempt to cross a slope of greater than 10 degrees.

- Do not park the crane on areas of dry grass, etc. The hot exhaust may cause a fire.

- Do not crawl with anything stowed on the vehicle. This may cause a shift in the centre of gravity and cause the vehicle to turn over.

c. ***Loading and unloading***

- Use non-slip boards of sufficient strength, width and length

- Drive the vehicle straight up and down, do not change direction

- Stop the engine and chock the tracks to secure the vehicle

d. ***After operation***

- Return the crawler levers to the neutral position and allow the engine to idle.

- Move the ‘crane-crawl’ lever to the ‘Crane’ position. This disables the driving control levers and electronically engages the crane function. No crawl operations can function with the interlock in this position

- Stop the engine and clean the crane. Pay particular attention to electrical areas such as wiring or battery as this could cause a short, leading to a fire. Likewise ensure all hot running areas of the engine, including the silencer, are thoroughly cleaned.

- Either park the crane in a garage or use a cover to protect it. If fitting the cover ensure all hot parts of the crane have cooled sufficiently. Otherwise it may lead to a fire.

- Remove the ignition key and store it safely. If being left for long periods of time, disconnect the negative lead from the battery.

3 SAFETY PRECAUTIONS FOR CRANE OPERATION

When operating the URW 094C always use EXTREME CAUTION as there is no automatic system to prevent tipping. The prevention of tipping is the sole responsibility of the operator. Always operate within the criteria of the Rated Load Chart (label UCE 02.58) and the Prohibition of Crane Operations (label UCE 02.41). Failure to do so may lead to serious injury or death

a. Before operation

- Carry out pre-use inspection on carrier, crane and any lifting accessories you may be using.
- Move the 'crane-crawl' lever to Crane

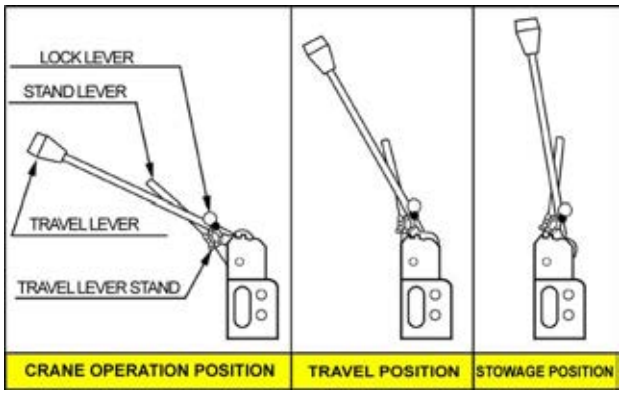

- Ensure that all safety devices are functioning properly.
- Ensure that adequate distance is maintained between the crane and any high voltage electricity cables. Refer to BS7121:Part 1:1989 and HSE Guidance Note GS6.
- Do not operate crane when wind speed exceeds 10m/sec (36 kph or 22 mph).
- Do not operate crane when there is lightning in the immediate vicinity of the operation.
- Ensure that the ambient lighting is adequate to carry out the task safely. For guidance on adequate lighting refer to the HSE document HS(G)38
- Ensure that the work area is adequately cordoned and signed to prevent unauthorised persons entering.
- Ensure that the area where the outriggers are to be set is level, uniform and firm. This may require the use of dunnage or road plates.
- Using the outriggers, lift the crane approximately 50mm from the floor. Ensure the carrier bed is level. If not use the outriggers to level it.
- In normal operation ensure the outriggers are fully extended.

b. ***<u>During Operation</u>***

- Automatic alarms do not replace good observation, they supplement it. Watch the hook during boom extension, remember that the hook is wound up during this operation and if the hook strikes the boom it may cause damage to the wire rope or sheaves. This may lead to damage and loss of the load.

- Operate the controls slowly and smoothly

- Slew the crane at slow speed. High speed slewing causes the load to swing out, increasing the working radius which may lead to instability.

- Never operate the crane in an overload condition, to do so may lead to serious injury or death.

- Never attempt to pull a load using the crane, this can lead to overturning or serious damage to the crane structure.

- Always perform a check lift. Lift the load approximately 50mm from the floor and check the stability of the load and the correct positioning of the lifting attachments before proceeding with the lifting operation.

- When lowering a load always stop approximately 100mm from the floor and lower the remaining distance slowly.

- Never leave a suspended load unattended.

- Never ride the hook or the load.

- Never stand underneath a suspended load.

- Do not allow ropes to go slack when lowering a load to the ground, or when retracting the jib as it will cause the ropes to unwind from the drum. This will cause irregular winding of the rope on take-up, dramatically shortening the life of the rope. If unwinding does occur, apply tension to the rope manually and take-up slowly, ensuring the rope feeds on evenly until the load or hook is clear of the floor.

- Ensure that there are a minimum of three turns of rope left on the drum at all times. This may occur where the hook is lowered below floor level, e.g. from the roof or into an underground shaft.

- Excessive hydraulic oil temperature may cause gasket or seal failure allowing scalding oil to be ejected at very high pressure.

c. ***<u>After Operation</u>***

- Ensure that the boom, outriggers and hook have been correctly stowed prior to crawling.

- Do not carry out any maintenance or repairs on the machine until the hydraulic and gear oil has sufficiently cooled.

4 DESCRIPTION OF CARRIER EQUIPMENT

1. **Rubber Track**. Cored bar and steel fabric cords are integrally moulded into the rubber

2. **Wheel Sprocket.** Transmits the drive to the track

3. **Idle Roller.** Supplies the correct tension to the track

4. **Truck Roller.** Supports the weight of the crane and rolls on the rubber track

5. **Crawling Motor.** Is a hydraulic motor with reduction gearing built inside the wheel sprocket housing

6. **Crawling Lever.** Allows the operator to change the direction of the machine

7. **Accelerator Lever.** Controls engine speed in travel mode only

8. **Horn Switch**

9. **Fuel Tank.** Lead free petrol only

10. **Hydraulic Oil Tank.** This reservoir supplies both the carrier and the crane

11. **Starter Switch.**

12. **Hour Meter.** This indicates total cumulative engine running time

13. **Choke Knob**

14. **Lock Lever**

URW 094 CER

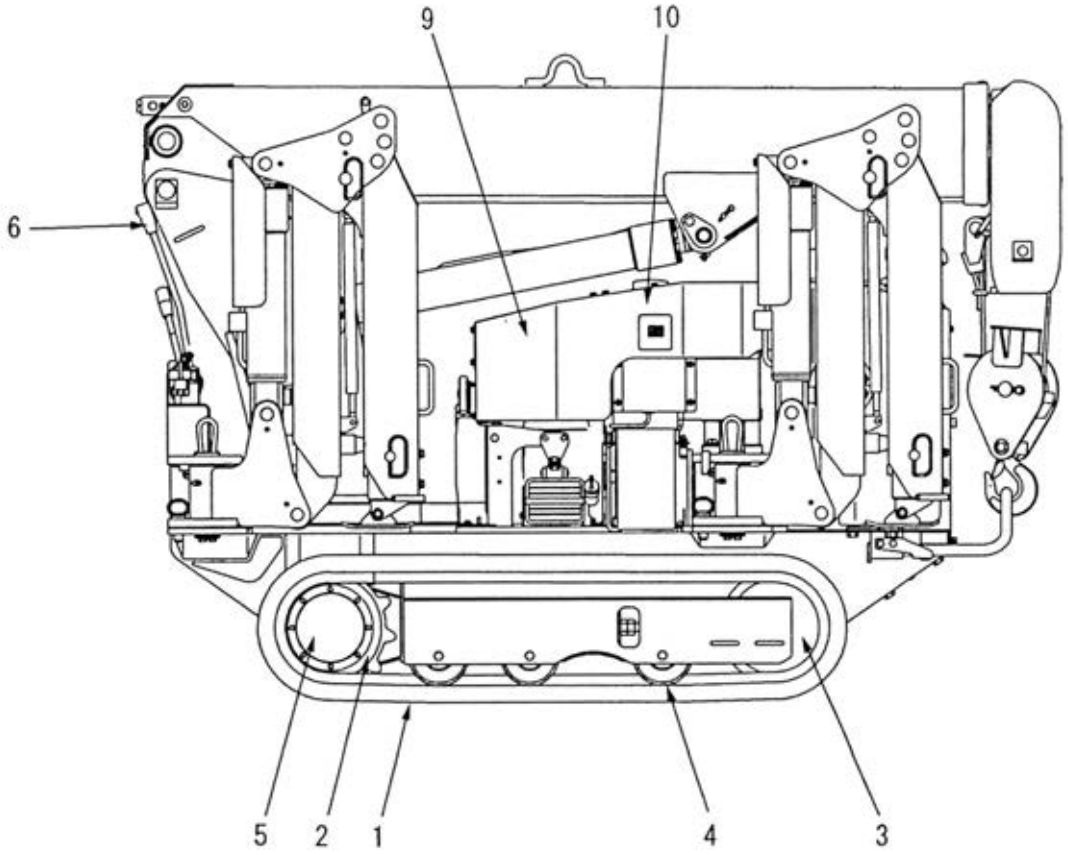

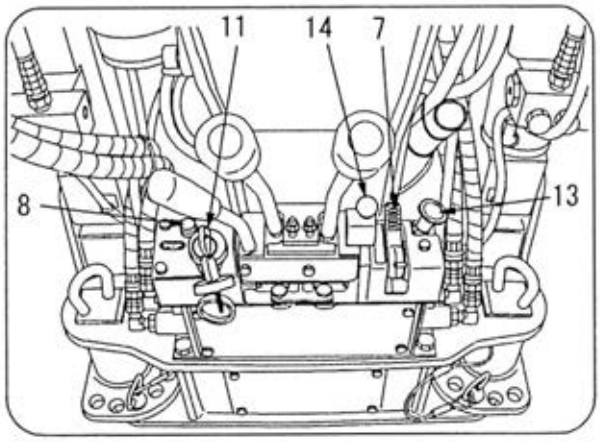

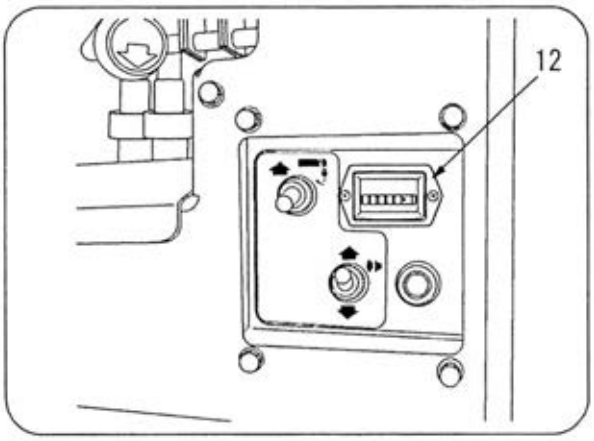

URW 095 CR/URW 295 CR

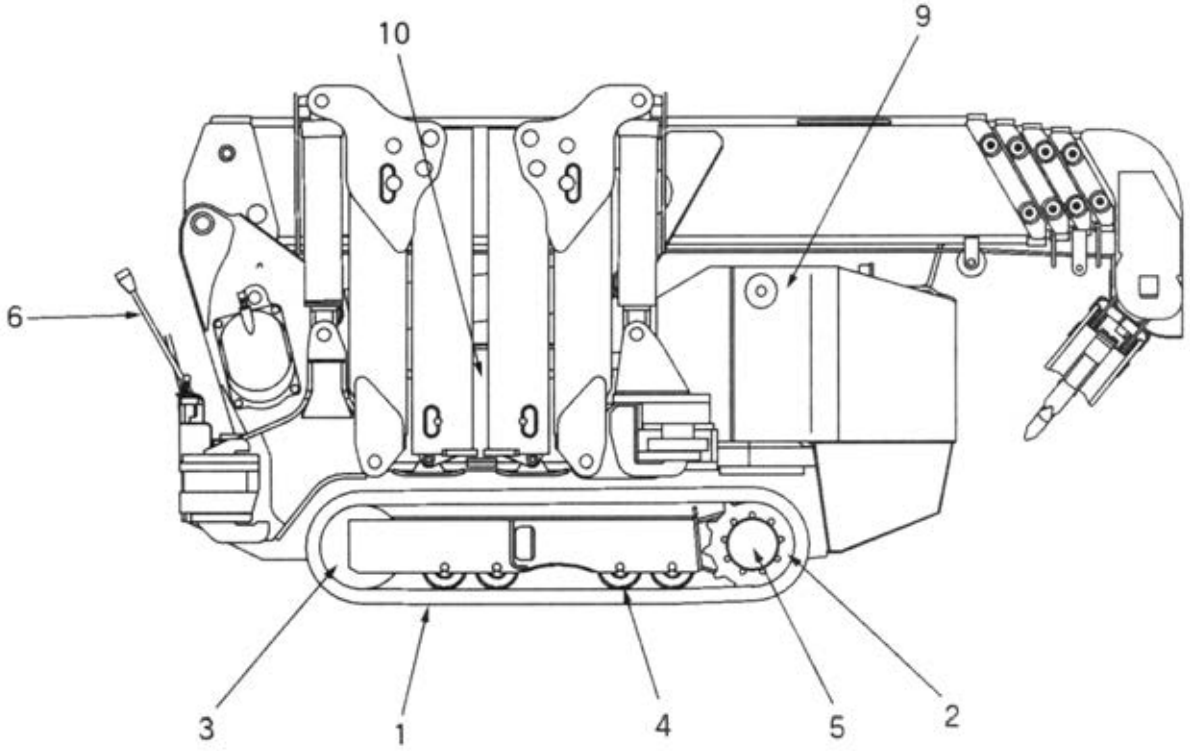

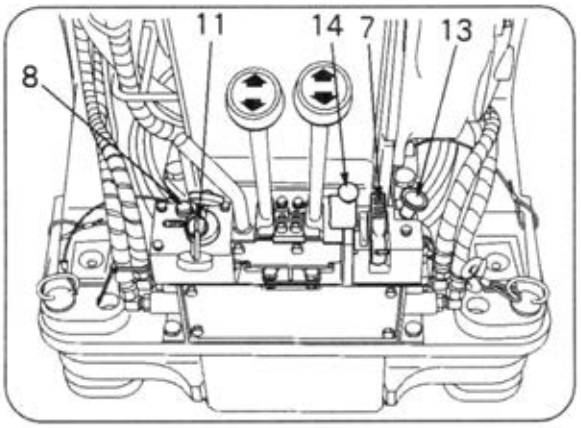

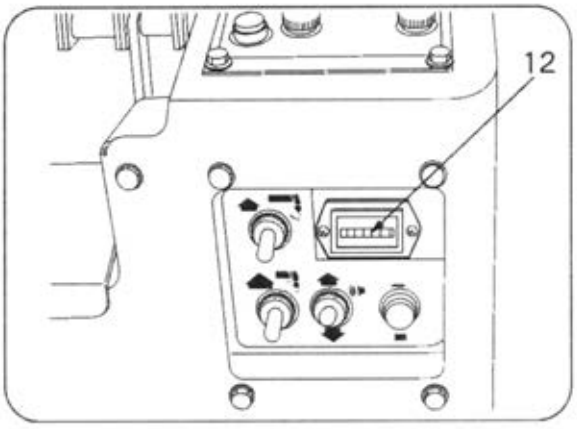

Intentionally Blank

This Page is intentionally blank so that the following two pages may be viewed as facing pages

5a **094 DESCRIPTION OF CRANE EQUIPMENT**

1 **Boom or Jib.** Extends and retracts by hydraulic power

2 **Column or Kingpost.** Vertically mounted member on which boom, winch and derrick cylinders are mounted. This can be slewed 360 degrees

3 **Frame.** This is the carrier and supports the column and outriggers

4 **Hoist Winch.** For rotating the wire drum

5 **Slewing Device.** Rotates the column via hydraulic motor

6 **Derricking Cylinder.** Raises and lowers the boom

7 **Telescoping Cylinder.** Extends and retracts the boom

8 **Outrigger.** This supports and stabilises the crane during operation

9 **Crane Operating Levers.** Respective levers operate crane functions, such as raising and lowering boom, telescoping and slewing boom, raising and lowering load

10 **Outrigger Control Levers.** Respective levers control raising/lowering and extending/retracting outriggers

11 **Hook.**

12 **Overwinding Alarm.** Alerts the operator that the hook is approaching the top of the boom and they should stop hoisting otherwise damage and/or loss of the load could occur

13 **Load Meter**

14 **Warning Horn.** By depressing the switch the horn may be sounded manually to warn others of your presence.

15 **Wire Rope.**

16 **Load Indicator**

17 **Automatic Stop.** This device stops the drum automatically when the wire rope is approaching 3 turns left on the drum.

18 **Level.** This is for checking the horizontal plane of the vehicle

19 **Outrigger Selection Switch.** This selects the active outrigger and its direction

20 **Remote Control Selector Switch.** This is for selecting or deselecting the radio remote control

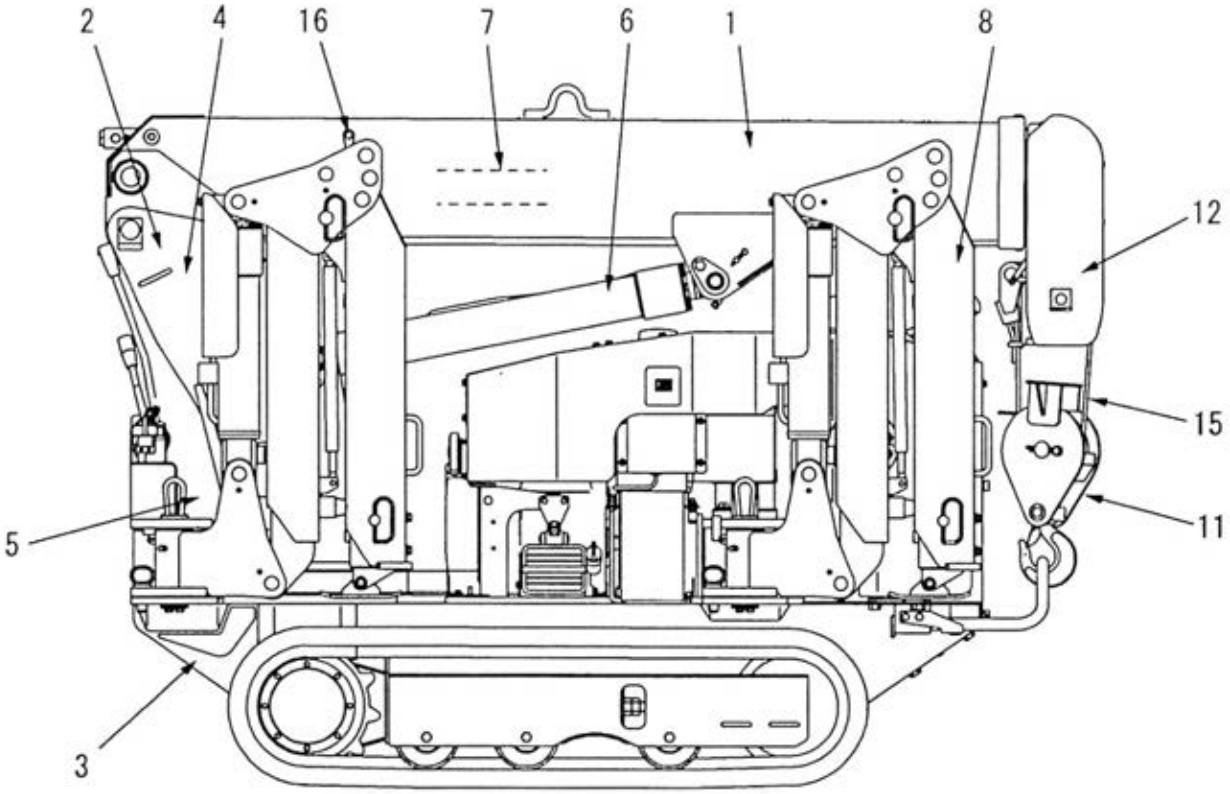
2
4
16
7
6
1
8
12
15
11
5
3

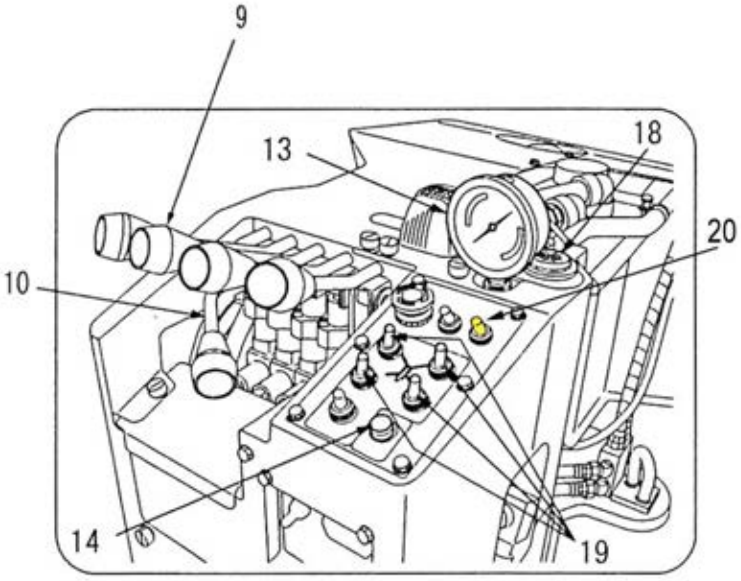
9
13
18
20
10
14
19

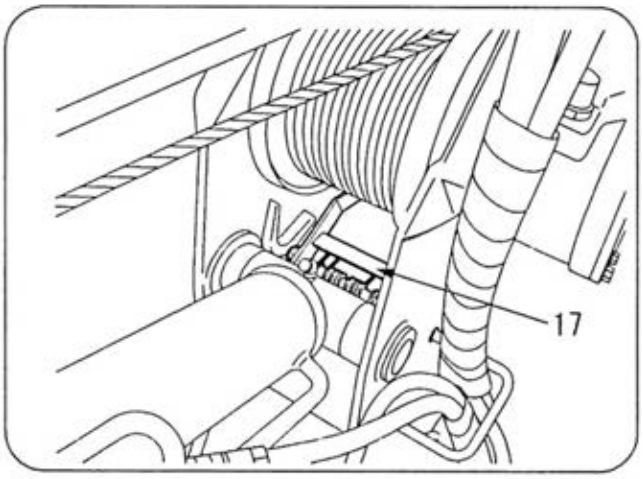
17

5b 095/295 DESCRIPTION OF CRANE EQUIPMENT

1. **Boom or Jib.** Extends and retracts by hydraulic power

2. **Column or Kingpost.** Vertically mounted member on which boom, winch and derrick cylinders are mounted. This can be slewed 360 degrees

3. **Frame.** This is the carrier and supports the column and outriggers

4. **Hoist Winch.** For rotating the wire drum

5. **Slewing Device.** Rotates the column via hydraulic motor

6. **Derricking Cylinder.** Raises and lowers the boom

7. **Telescoping Cylinder.** Extends and retracts the boom

8. **Outrigger.** This supports and stabilises the crane during operation

9. **Crane Operating Levers.** Respective levers operate crane functions, such as raising and lowering boom, telescoping and slewing boom, raising and lowering load

10. **Outrigger Control Levers.** Respective levers control raising/lowering and extending/retracting outriggers

11. **Hook.**

12. **Overwinding Alarm.** Alerts the operator that the hook is approaching the top of the boom and they should stop hoisting otherwise damage and/or loss of the load could occur

13. **Warning Horn.** By depressing the switch the horn may be sounded manually to warn others of your presence.

14. **Wire Rope.**

15. **Automatic Stop.** This device stops the drum automatically when the wire rope is approaching 3 turns left on the drum.

16. **Level.** This is for checking the horizontal plane of the vehicle

17. **Outrigger Selection Switch.** This selects the active outrigger and its direction

18. **Remote Control Mode Switch.** Used to access additional features of the remote control

19. **Outrigger Operation Light.** Flashes while outriggers are in motion

20. **Crane Operation Warning Light Group.** The green light flashes during crane operation when the crane is operating safely. The yellow light flashes when the crane is approaching a preset safe-condition limit. The red light flashes when a dangerous condition or preset safe condition limit is reached

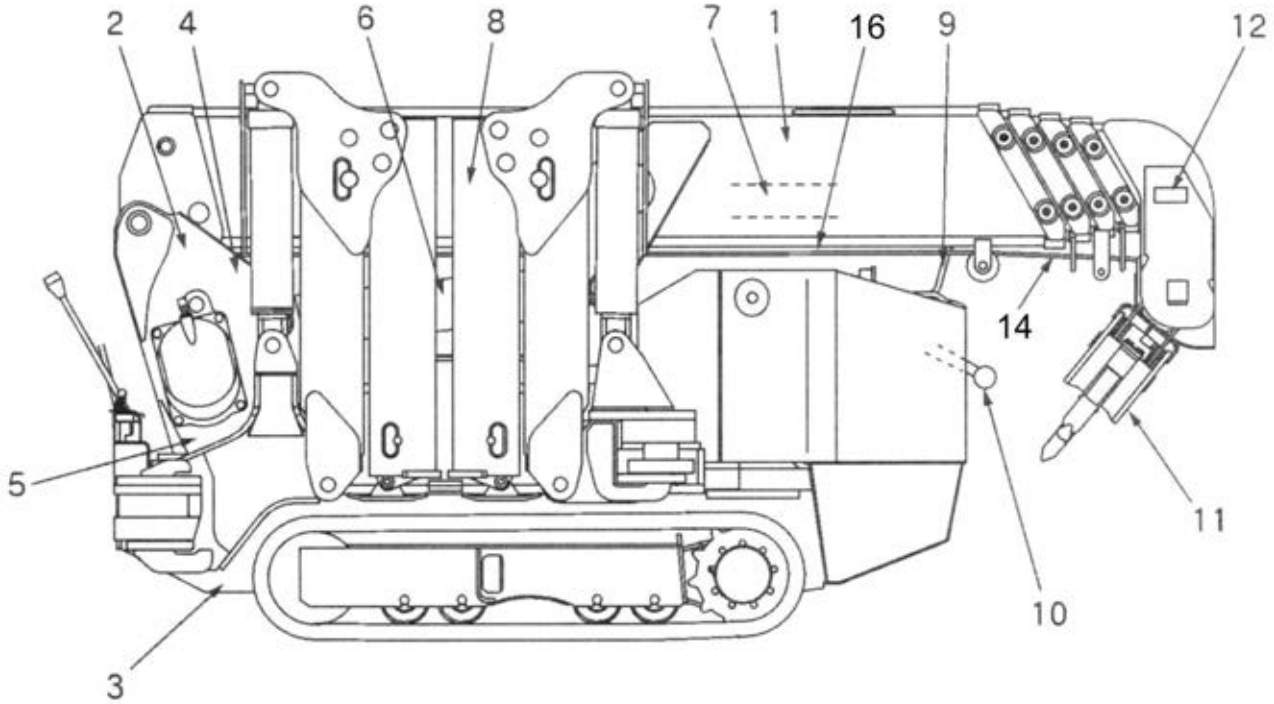
2
4
6
8
7
1
16
9
12
14
5
11
10
3

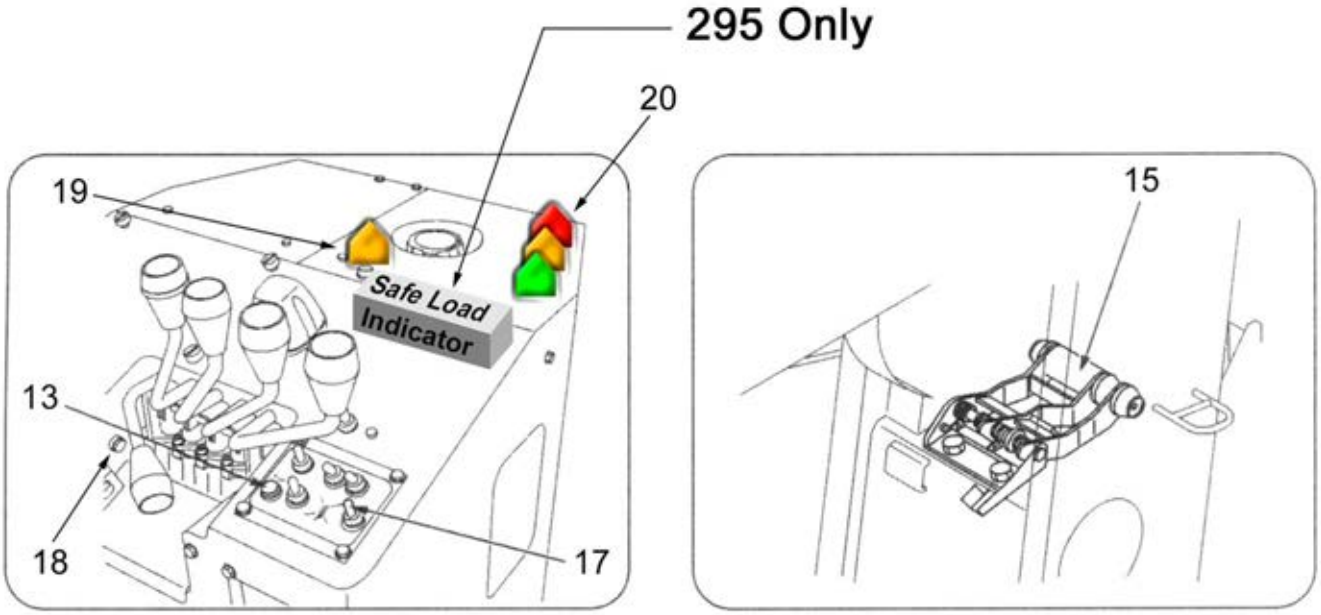
295 Only
20
19
Safe Load
Indicator
13
18
17
15

Intentionally Blank

6 INFORMATION PLATES

a. *094 Position of information plates*

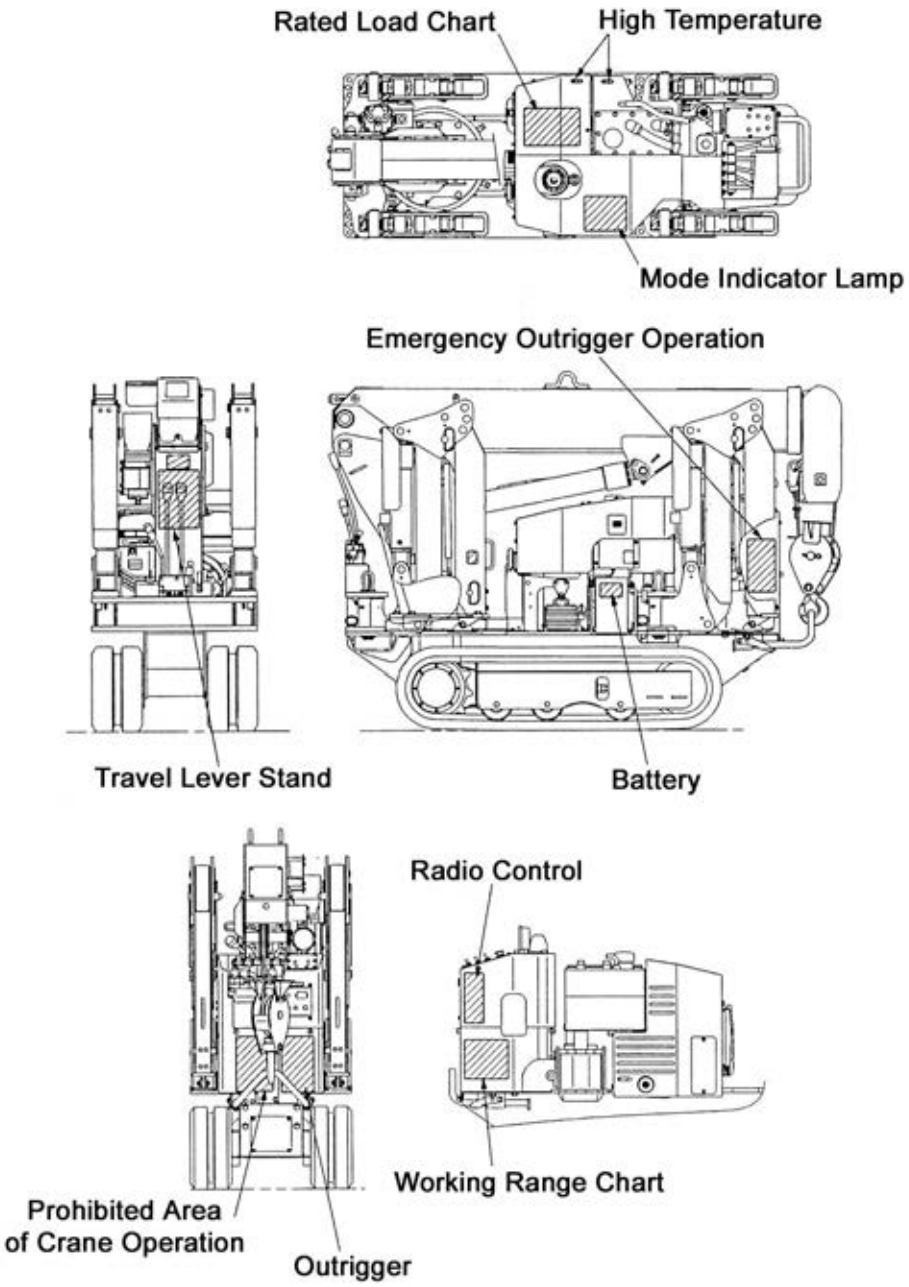

b. *095/295 Position of information plates*

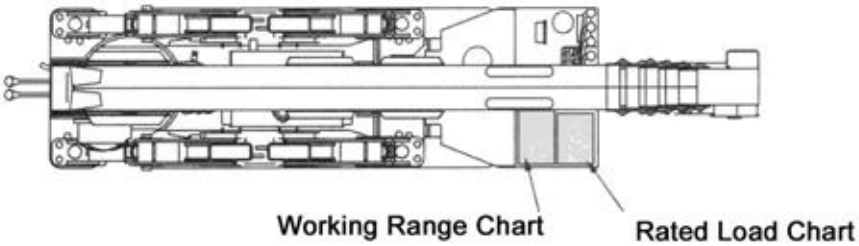

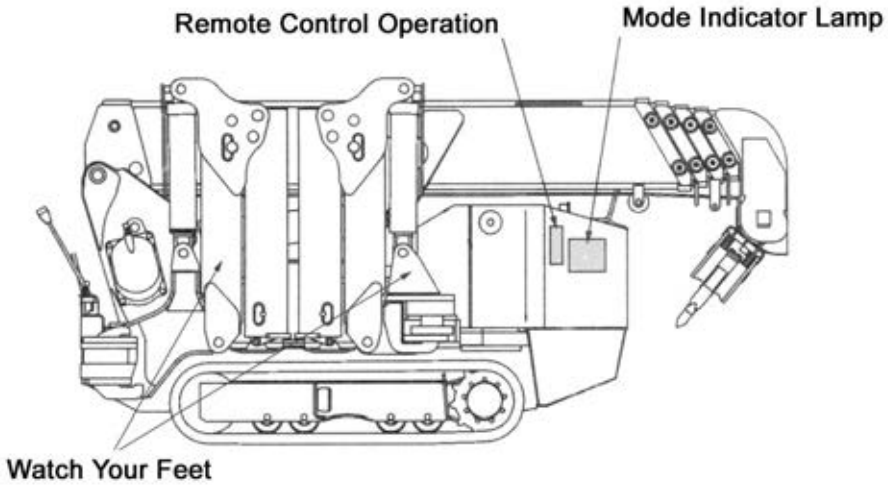

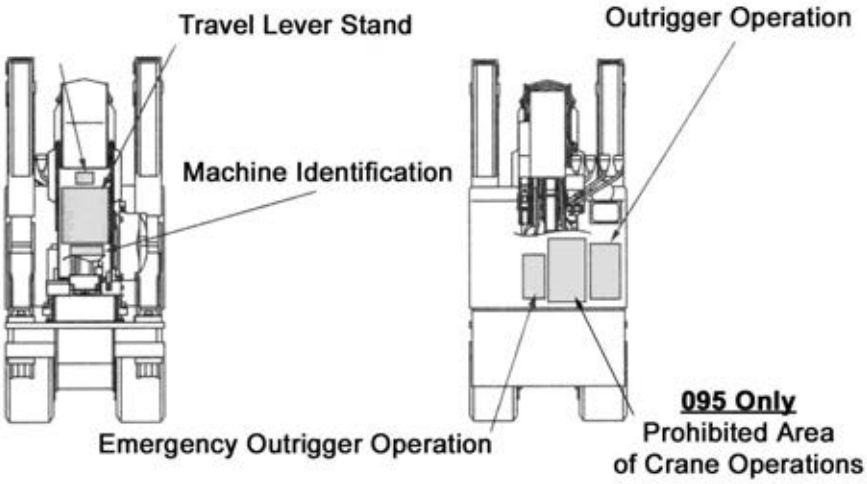

c. *Index of decals*

Decal	Description	Model	Qty per crane
UCE 01.02	Lead free	094 / 095 / 295	1
UCE 01.03	Beware feet	All	4
UCE 01.04	Beware trapping in rope	All	2
UCE 01.05	Emergency stop	All	1
UCE 01.06	Beware rotating parts	All	1
UCE 01.07	Flammable	All	1
UCE 01.08	High pressure hydraulic oil	All	2
UCE 01.09	Adequate ventilation	All	1
UCE 01.10	Beware trapping in belts	All	1
UCE 01.12	Striking hazard	All	4
UCE 01.13	095/295 CR Total weight	095 / 295 CR	2
UCE 01.14	095/295 CRE Total weight	095 / 295 CRE	2
UCE 01.19	Battery	All	1
UCE 01.20	Corrosive	All	1
UCE 01.21	Trapping hazard	All	4
UCE 01.22	General warning	All	4
UCE 01.23	Electrical hazard	All	1
UCE 01.24	Hot surface	All	1
UCE 01.27	Maximum gradeability	All	1
UCE 01.28	Lifting point	All	4
UCE 01.29	Read manual	All	1
UCE 01.30	Read service manual	All	1
UCE 01.31	Do not put fingers in holes	All	4
UCE 01.34	No hands	All	1
UCE 01.35	Smoking prohibited	All	1
UCE 01.36	094 CER Total weight	094	1
UCE 01.38a	094 Noise Level	094	1
UCE 01.38b	095 Noise Level	095	1
UCE 01.38c	295 Noise Level	295	1
UCE 01.40	Outrigger positions	095 / 295	1
UCE 02.40	Outrigger positions	094	1
UCE 01.41	Outrigger prohibition	095	1
UCE 02.41	Outrigger prohibition	094	1
UCE 01.42	Outrigger emergency	095 / 295	1
UCE 02.42	Outrigger emergency	094	1
UCE 01.43	Mode indicator lamp	094 / 095 / 295	1
UCE 01.44	Loading/Offloading	All	1
UCE 02.45	Trained personnel	All	1
UCE 01.46	Travel lever stand	094 / 095 / 295	1
UCE 01.47	Characteristics of performance	All	1
UCE 01.48	Radio Remote control operation	094 / 095 / 295	*1
UCE 01.48a	Remote control operation	095 / 295	*1
UCE 01.49	Working range chart	095 / 295	1
UCE 02.49	Working range chart	094	1
UCE 01.50	Rated load chart	095	1
UCE 01.51	Rated load chart	295	1
UCE 02.58	Rated load chart	094	1
UCE 02.61	Outrigger Mode Indicator	094 / 095 / 295	1
UCE 02.62	Selection Switch	094 / 095 / 295	1
09EM 37070	Searcher Hook Rated Load Chart	095 / 295	1
09EM 37080	Lifting Capacity	095 / 295	1
09EM 37090	Angle Position for Searcher Hook	095 / 295	1
09EM 37110	Angle Position for Searcher Hook	095 / 295	1

UCE 01.02

UCE 01.03

UCE 01.04

UCE 01.05

UCE 01.06

UCE 01.07

UCE 01.08

UCE 01.09

UCE 01.10

UCE 01.12

UCE 01.13

UCE 01.14

UCE 01.19

UCE 01.20

UCE 01.21

UCE 01.22

UCE 01.23

UCE 01.24

UCE 01.27

UCE 01.28

UCE 01.29

UCE 01.30

UCE 01.31

UCE 01.34

UCE 01.35

UCE 01.36

UCE 01.38a

UCE 01.38b

UCE 01.38c

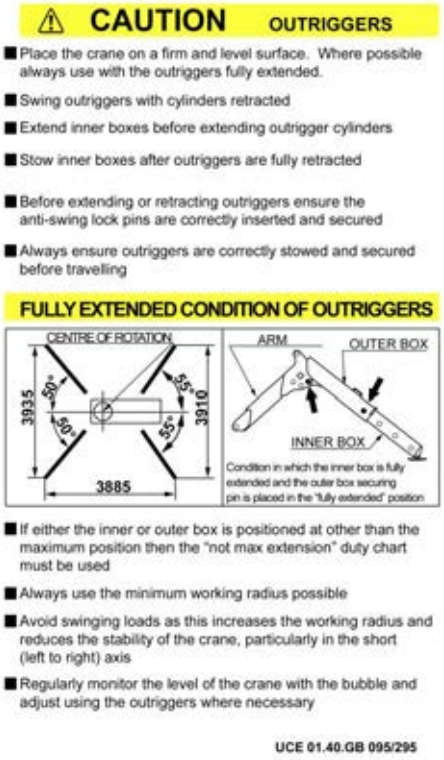

CAUTION OUTRIGGERS

- Place the crane on a firm and level surface. Where possible always use with the outriggers fully extended.
- Swing outriggers with cylinders retracted
- Extend inner boxes before extending outrigger cylinders
- Stow inner boxes after outriggers are fully retracted
- Before extending or retracting outriggers ensure the anti-swing lock pins are correctly inserted and secured
- Always ensure outriggers are correctly stowed and secured before travelling

FULLY EXTENDED CONDITION OF OUTRIGGERS

- If either the inner or outer box is positioned at other than the maximum position then the "not max extension" duty chart must be used
- Always use the minimum working radius possible
- Avoid swinging loads as this increases the working radius and reduces the stability of the crane, particularly in the short (left to right) axis
- Regularly monitor the level of the crane with the bubble and adjust using the outriggers where necessary

UCE 01.40.GB 095/295

UCE 01.40 095 / 295

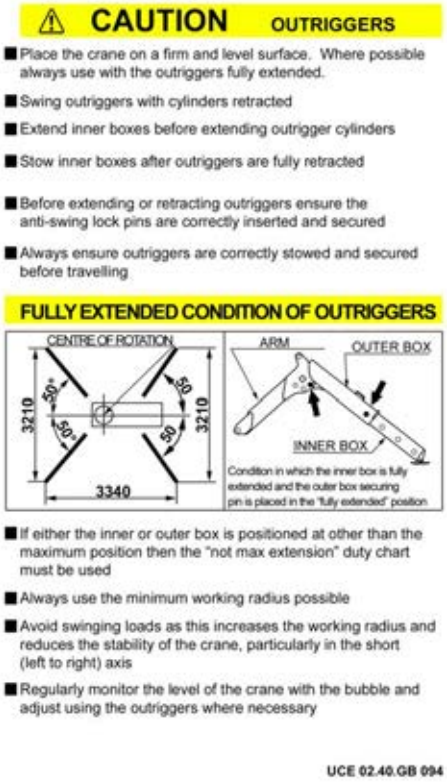

CAUTION OUTRIGGERS

- Place the crane on a firm and level surface. Where possible always use with the outriggers fully extended.
- Swing outriggers with cylinders retracted
- Extend inner boxes before extending outrigger cylinders
- Stow inner boxes after outriggers are fully retracted
- Before extending or retracting outriggers ensure the anti-swing lock pins are correctly inserted and secured
- Always ensure outriggers are correctly stowed and secured before travelling

FULLY EXTENDED CONDITION OF OUTRIGGERS

- If either the inner or outer box is positioned at other than the maximum position then the "not max extension" duty chart must be used
- Always use the minimum working radius possible
- Avoid swinging loads as this increases the working radius and reduces the stability of the crane, particularly in the short (left to right) axis
- Regularly monitor the level of the crane with the bubble and adjust using the outriggers where necessary

UCE 02.40.GB 094

UCE 02.40 094 Only

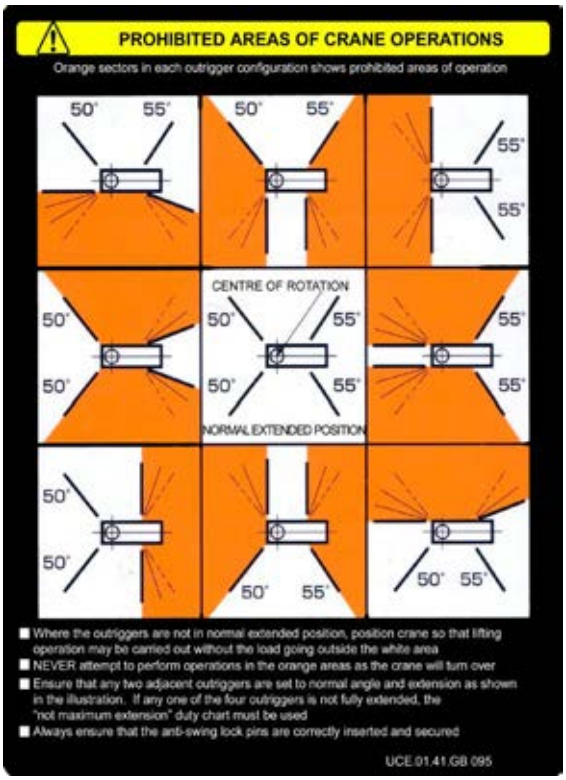

PROHIBITED AREAS OF CRANE OPERATIONS

Orange sectors in each outrigger configuration shows prohibited areas of operation

- Where the outriggers are not in normal extended position, position crane so that lifting operation may be carried out without the load going outside the white area
- NEVER attempt to perform operations in the orange areas as the crane will turn over
- Ensure that any two adjacent outriggers are set to normal angle and extension as shown in the illustration. If any one of the four outriggers is not fully extended, the "not maximum extension" duty chart must be used
- Always ensure that the anti-swing lock pins are correctly inserted and secured

UCE.01.41.GB 095

UCE 01.41 095 Only

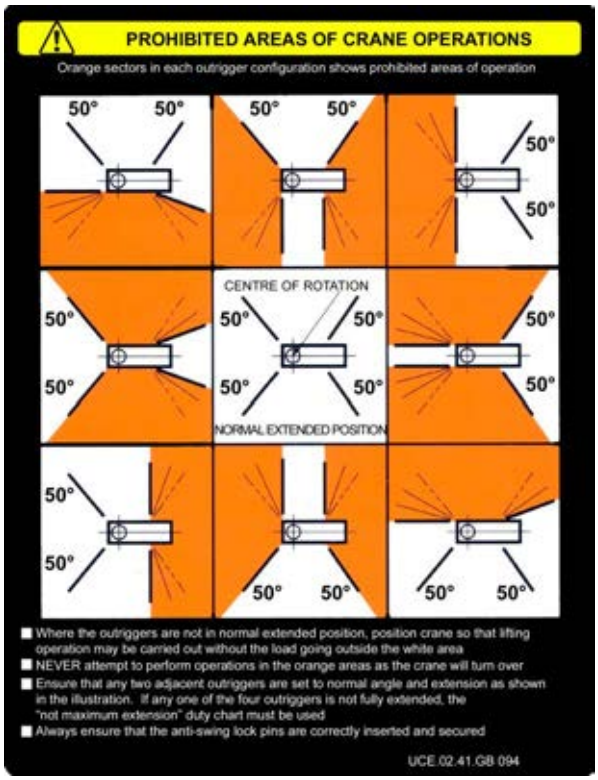

PROHIBITED AREAS OF CRANE OPERATIONS

Orange sectors in each outrigger configuration shows prohibited areas of operation

- Where the outriggers are not in normal extended position, position crane so that lifting operation may be carried out without the load going outside the white area
- NEVER attempt to perform operations in the orange areas as the crane will turn over
- Ensure that any two adjacent outriggers are set to normal angle and extension as shown in the illustration. If any one of the four outriggers is not fully extended, the "not maximum extension" duty chart must be used
- Always ensure that the anti-swing lock pins are correctly inserted and secured

UCE.02.41.GB 094

UCE 02.41 094 Only

⚠ OUTRIGGER EMERGENCY OPERATION

If the outriggers fail to operate properly, they may be operated using the following procedures. These procedures are for emergency only. The crane must be inspected and repaired by a qualified UNIC crane engineer before being used again.

1. Remove the cover of the outrigger valves
2. Push the solenoid valve button of the outrigger to be operated (see table below) with a narrow rod such as a screwdriver
3. Operate the relevant outrigger control lever while keeping the solenoid valve button pressed

OPERATION		OPERATION METHOD
OUTRIGGER 1	EXT	Push 1 and operate the lever
	RET	Push 2 and operate the lever
OUTRIGGER 2	EXT	Push 3 and operate the lever
	RET	Push 4 and operate the lever
OUTRIGGER 3	EXT	Push 5 and operate the lever
	RET	Push 6 and operate the lever
OUTRIGGER 4	EXT	Push 7 and operate the lever
	RET	Push 8 and operate the lever

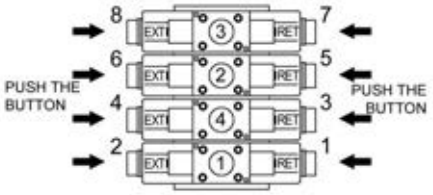

VALVES FOR OPERATING OUTRIGGERS

Note: When removing the cover or pushing the solenoid valve button take care not to damage the wiring

UCE.01.42.GB 095/295

UCE 01.42 095 / 295

⚠ OUTRIGGER EMERGENCY OPERATION

If the outriggers fail to operate properly, they may be operated using the following procedures. These procedures are for emergency only. The crane must be inspected and repaired by a qualified UNIC crane engineer before being used again.

1. Remove the cover of the outrigger valves
2. Push the solenoid valve button of the outrigger to be operated (see table below) with a narrow rod such as a screwdriver
3. Operate the relevant outrigger control lever while keeping the solenoid valve button pressed

OPERATION		OPERATION METHOD
OUTRIGGER 1	EXT	Push 4 and operate the lever
	RET	Push 3 and operate the lever
OUTRIGGER 2	EXT	Push 8 and operate the lever
	RET	Push 7 and operate the lever
OUTRIGGER 3	EXT	Push 6 and operate the lever
	RET	Push 5 and operate the lever
OUTRIGGER 4	EXT	Push 2 and operate the lever
	RET	Push 1 and operate the lever

VALVES FOR OPERATING OUTRIGGERS

Note: When removing the cover or pushing the solenoid valve button take care not to damage the wiring

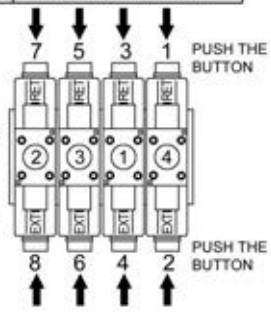

UCE.02.42.GB 094

UCE 02.42 094 Only

⚠ CAUTION MODE INDICATOR LAMP

INDICATOR (LIT)	OPERATIONAL MODE (STATUS)	REMOTE CONTROL SELECTOR	POSSIBLE OPERATIONS
00	CRANE STATUS	SELECTOR ON	MANUAL AND REMOTE
01		SELECTOR OFF	MANUAL ONLY
04	OUTRIGGER REMOTE CONTROL MODE	SELECTOR ON	MANUAL AND REMOTE MANUAL ONLY
05		SELECTOR OFF	
10	OVERWINDING	—	—
13	HOOK STORAGE	—	—
14	CANCELLATION OF AUTOMATIC STOP	—	—
15	AUTOMATIC STOP	—	—
oF	DRIVE MODE	—	—

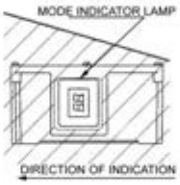

- The table shows the main indications. For further information see the remote control manual
- The remote control selector switch opposite the Mode Indicator Lamp allows the remote control operation to be turned ON or OFF
- When remote control is ON all remote control operations may be performed
- When remote control is OFF no remote control operations may be performed
- Flashing of the mode indicator lamp shows incorrect operation or malfunction of the equipment. See the remote control manual for troubleshooting advice

UCE.01.43.GB 095/295

UCE 01.43 094 / 095 / 295

⚠ LOADING AND UNLOADING PROCEDURES UNIC

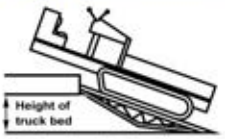

Minimum length of loading ramp must be 4 times as long as the height of the truck bed

Loading ramp requirements

- **Material:** **Metal board with anti-slip surface**
- **Strength** **Must be capable of supporting gross weight of crane on one board**

1. When loading ramps are used always ensure the vehicle is stable.
2. Install the loading ramps securely to ensure they will not move during use
3. Stop the loading vehicle engine and apply the parking brake
4. Align the crane tracks with the loading ramp(s)
5. Always use a banksman to direct the crane
6. Move the crane up or down the loading ramp at the lowest possible speed
7. Always ensure the driver/operator is seated or stood at the higher end of the crane
8. Do not make any change of direction whilst travelling on the loading ramp unless specifically instructed by the banksman
9. Be especially careful when the middle of the tracks reach the top of the loading ramp as the weight will suddenly move
10. Secure the crane on the vehicle bed by chocking the tracks front and rear and being down with ratchet straps or chains and tensioners

UCE.01.44.GB ALL

UCE 01.44 094 / 095 / 295

WARNING

BEFORE ANY LIFTING OPERATIONS START

1. Ensure outriggers are properly setup and in contact with the ground
2. Ensure tracks are raised at least 50mm, crane is level and all outriggers are bearing load

UCE 02.45 GB ALL

UCE 02.45 094 / 095 / 295

CAUTION TRAVEL LEVER STAND

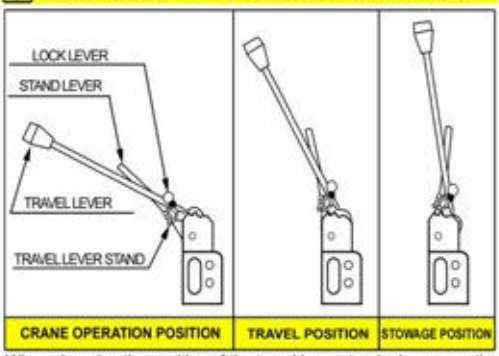

When changing the position of the travel lever stand, always use the stand lever and NOT the travel levers

CRANE OPERATION POSITION

To move to crane operation position pull up the lock lever and tilt the travel lever stand towards you.

Tilt the travel lever stand until it contacts the stop. Failure to do this could result in the body of the crane striking the levers during rotation, resulting in breakage

TRAVEL POSITION

When travelling, set the travel lever stand to the travel position.

Ensure the lock lever securely locks it in this position

When the travel lever stand is in the travel position no crane functions can be carried out

Always stow the outriggers before changing to the travel position.

Failure to stow the outriggers before travelling could cause serious accidents and injuries

STOWAGE POSITION

Before transporting a crane lift up the lock lever and tilt the travel lever stand towards the column

Important Note: If the hydraulic pump is operating the tracks can be driven using the travel levers, even in the stowage position

UCE.01.46. GB 095/295

UCE 01.46 094 / 095 / 295

CHARACTERISTICS OF PERFORMANCE

1. With the same working radius, lifting capacity will still vary depending on the stage of boom extension in use. Even slight changes in the working radius can have large effects on the capacity
2. Lifting capacity of the crane reduces as the working radius increases
3. Lifting capacity of the crane varies according to the outrigger extension
4. Stability of the crane varies according to the boom direction, forward, rearwards or lateral

GENERAL RULES FOR USING CRANE

(1) Before work
1. Make sure you have read and understood the manual before use
2. Always carry out the pre-use inspection in accordance with legislation
3. Where possible always set the outriggers to their maximum extension
4. Ensure the outrigger locking pins are correctly inserted and secured before extending outrigger
5. Ensure the outriggers are setup on firm and level ground and that all the outriggers are in contact with the ground
6. Use the outriggers to raise the rubber tracks 50mm off the ground
7. Use the outriggers to level the carrier
8. Ensure the overhoist alarm works (voice warning and operation stops)

(2) During work
1. Stable and safe lifting depends on the outrigger settings and ground conditions. A lift must never be carried out if one or more outriggers are off the ground
2. Always ensure the engine is run at the lowest possible speed to carry out a given operation
3. Operate the controls slowly and smoothly to minimise any swaying of the load. Loads that swing can alter the stability of the crane leading to extremely dangerous situations
4. Do not use the crane to drag loads, either laterally or longitudinally, nor should you lift a load at an angle, this is extremely dangerous and could damage the crane
5. Do not allow anyone to stand or walk under a boom when a load is attached. Never leave suspended loads unattended

(3) During travelling
1. Boom, hook and outriggers should be stowed securely prior to travelling
2. When turning or travelling over rough ground, use the slowest speed
3. When parking always place chocks under the tracks
4. When travelling uphill or up boards/ramps always ensure the driver/operator is seated or stood at the highest end of the vehicle

(4) Inspection
1. All inspections must be carried out in accordance with current legislation. Failure to carry out periodic servicing as specified in the maintenance manual will invalidate any warranty in force
2. Defects must be rectified before crane is next used
3. The replacement or replenishment of any consumables must be carried out in accordance with the standards in the maintenance manual

01.47.GB ALL

UCE 01.47 094 / 095 / 295

CAUTION REMOTE CONTROL OPERATION

- For approximately 2 seconds after the key is switched ON the system is analysed. DO NOT operate the crane during this period. If the crane IS operated during system analysis a voice announces "Service Remote Control". If this happens turn the key ON again
- When the emergency stop switch on the switch panel is activated, all the crane movements stop immediately
- If, after the key is turned ON, the crane does not operate in spite of the voice announcing "Remote Control Ready", the emergency stop switch may still be activated. Turn the emergency stop switch to RESET
- Take care when performing hook storage with the switch panel as the manual operating lever also moves
- Take care when operating with the remote control as the manual levers move in conjunction with the operation of the relevant remote selection

UCE 01.48a.GB 095/295

UCE 01.48a 095 / 295

⚠ CAUTION

- Read the operations manual carefully before use
- When operating the crane check the surrounding area for potential hazards
- Ensure all relevant inspections and maintenance has been carried out before starting operation
- Ensure all power sources are stopped or isolated before starting inspection and maintenance
- Ensure engine has cooled down sufficiently before commencing inspection and maintenance
- Beware of fire hazard when positioning or parking as a hot engine may ignite dry grass, paper or cloths
- Ensure all covers removed during inspection and maintenance are replaced correctly
- Level the crane using the outriggers and bubble level
- Never allow the crane to travel with a load (no pick and carry), and never operate without the outriggers securely locked in place
- When the outriggers are extended and in contact with the ground, raise the carrier approximately 50mm. Failure to do so will cause serious damage to the carrier. NEVER operate with the carrier raised excessively high as this will cause severe damage to the carriers and seriously reduces the stability
- Slewing at high speed will cause the working radius to increase and make the crane unstable. It may also cause severe damage to the boom
- When extending the boom ensure there is sufficient space between the hook block and the tip of the boom
- Always ensure the hook and outriggers are stored correctly before travelling
- Ensure all power sources are turned off (and disconnected where necessary) at cease work

WORKING RANGE CHART

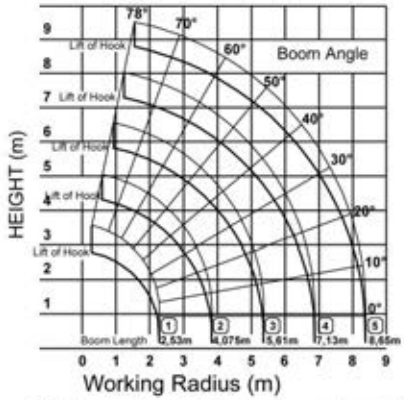

Note: The chart shows the data when the crane is operated with no load and shift due to deflection is not considered

⚠ CAUTION SLEWING BOOM

UCE.01.49.GB 095/295

UCE 01.49 095 / 295

⚠ CAUTION

- Read the operations manual carefully before use
- When operating the crane check the surrounding area for potential hazards
- Ensure all relevant inspections and maintenance has been carried out before starting operation
- Ensure all power sources are stopped or isolated before starting inspection and maintenance
- Ensure engine has cooled down sufficiently before commencing inspection and maintenance
- Beware of fire hazard when positioning or parking as a hot engine may ignite dry grass, paper or cloths
- Ensure all covers removed during inspection and maintenance are replaced correctly
- Level the crane using the outriggers and bubble level
- Never allow the crane to travel with a load (no pick and carry), and never operate without the outriggers securely locked in place
- When the outriggers are extended and in contact with the ground, raise the carrier approximately 50mm. Failure to do so will cause serious damage to the carrier. NEVER operate with the carrier raised excessively high as this will cause severe damage to the carriers and seriously reduces the stability
- Slewing at high speed will cause the working radius to increase and make the crane unstable. It may also cause severe damage to the boom
- When extending the boom ensure there is sufficient space between the hook block and the tip of the boom
- Always ensure the hook and outriggers are stored correctly before travelling
- Ensure all power sources are turned off (and disconnected where necessary) at cease work

WORKING RANGE CHART

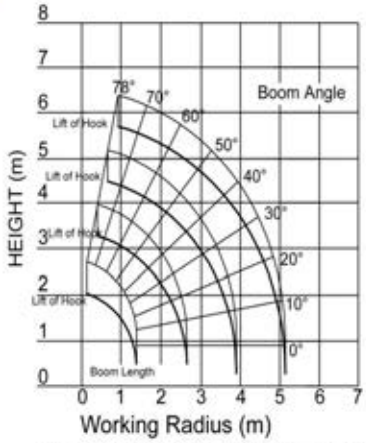

Note: The chart shows the data when the crane is operated with no load and shift due to deflection is not considered

⚠ CAUTION SLEWING BOOM

UCE.02.49.GB 094

UCE 02.49 094 Only

RATED LOAD CHART

Rated load is the lifting capacity excluding the weight of the hook

BOOM SECTION	1	1+2							
WORKING RADIUS (m)	1,0	1,4	1,5	1,8	2,0	2,5	3,0	3,5	3,835
RATED LOAD (t) OUTRIGGER MAXEXT	0,995	0,995	0,995	0,995	0,995	0,995	0,995	0,995	0,9
RATED LOAD (t) OUTRIGGER NOTMAXEXT	0,995	0,995	0,995	0,995	0,995	0,65	0,49	0,35	0,25

BOOM SECTION	1+2+3								
WORKING RADIUS (m)	2,2	2,5	2,9	3,0	3,5	4,0	4,5	5,0	5,37
RATED LOAD (t) OUTRIGGER MAXEXT	0,995	0,995	0,995	0,995	0,995	0,8	0,65	0,52	0,43
RATED LOAD (t) OUTRIGGER NOTMAXEXT	0,8	0,65	0,53	0,5	0,38	0,28	0,22	0,16	0,12

BOOM SECTION	1+2+3+4								
WORKING RADIUS (m)	3,4	3,8	4,0	4,5	5,0	5,5	6,0	6,5	6,89
RATED LOAD (t) OUTRIGGER MAXEXT	0,85	0,85	0,75	0,6	0,6	0,42	0,36	0,32	0,27
RATED LOAD (t) OUTRIGGER NOTMAXEXT	0,42	0,34	0,3	0,25	0,19	0,14	0,1	0,08	0,06

BOOM SECTION	1+2+3+4+5								
WORKING RADIUS (m)	3,8	4,1	4,5	5,0	5,5	6,0	6,5	7,0	8,0	8,41
RATED LOAD (t) OUTRIGGER MAXEXT	0,55	0,55	0,45	0,37	0,31	0,27	0,23	0,2	0,15	0,13
RATED LOAD (t) OUTRIGGER NOTMAXEXT	0,35	0,29	0,25	0,2	0,16	0,13	0,1	0,07	0,04	0,03

POINTS TO OBSERVE

The rated load is the performance when the crane is level and is based on the actual operating radius including boom deflection under load. The rated load is also based on the strength and stability of the crane

Maximum extension of the outrigger is when the inner box is extended to the maximum extension position and the lock pin in the outrigger arm is placed in the MAX position. Any other position of either the inner box or outrigger arm is classed as NOT MAX

If any of the outriggers do not meet the MAX criteria, the crane must be classed as NOT MAX

Improper set-up of the outriggers may cause the crane to tip over. Always place the outriggers on a firm and level surface, the use of steel road plates or wooden dunnage may be required. Always try to operate at maximum extension. Ensure that all lock pins are inserted and secured correctly

Use boom 1+2+3 where boom 3 is extended any distance from boom 2. Use boom 1+2+3+4 when boom extension 4 extends any distance from boom 3. Use boom 1+2+3+4+5 when the mark on the side of boom 4 moves away from boom 3

UCE 01.50.GB 095

UCE 01.50 095 Only

RATED LOAD CHART

Rated load is the lifting capacity excluding the weight of the hook

BOOM SECTION	1	1+2							
WORKING RADIUS (m)	1,0	1,4	1,5	1,8	2,0	2,5	3,0	3,5	3,835
RATED LOAD (t) OUTRIGGER MAXEXT	2,9	2,9	2,65	2,25	2,05	1,65	1,3	1,0	0,9
RATED LOAD (t) OUTRIGGER NOTMAXEXT	2,0	2,0	2,0	1,45	1,1	0,65	0,49	0,35	0,25

BOOM SECTION	1+2+3								
WORKING RADIUS (m)	2,2	2,5	2,9	3,0	3,5	4,0	4,5	5,0	5,37
RATED LOAD (t) OUTRIGGER MAXEXT	1,35	1,35	1,35	1,25	1,0	0,8	0,65	0,52	0,43
RATED LOAD (t) OUTRIGGER NOTMAXEXT	0,8	0,65	0,53	0,5	0,38	0,28	0,22	0,16	0,12

BOOM SECTION	1+2+3+4								
WORKING RADIUS (m)	3,4	3,8	4,0	4,5	5,0	5,5	6,0	6,5	6,89
RATED LOAD (t) OUTRIGGER MAXEXT	0,85	0,85	0,75	0,6	0,6	0,42	0,36	0,32	0,27
RATED LOAD (t) OUTRIGGER NOTMAXEXT	0,42	0,34	0,3	0,25	0,19	0,14	0,1	0,08	0,06

BOOM SECTION	1+2+3+4+5								
WORKING RADIUS (m)	3,8	4,1	4,5	5,0	5,5	6,0	6,5	7,0	8,0	8,41
RATED LOAD (t) OUTRIGGER MAXEXT	0,55	0,55	0,45	0,37	0,31	0,27	0,23	0,2	0,15	0,13
RATED LOAD (t) OUTRIGGER NOTMAXEXT	0,35	0,29	0,25	0,2	0,16	0,13	0,1	0,07	0,04	0,03

POINTS TO OBSERVE

The rated load is the performance when the crane is level and is based on the actual operating radius including boom deflection under load. The rated load is also based on the strength and stability of the crane

Maximum extension of the outrigger is when the inner box is extended to the maximum extension position and the lock pin in the outrigger arm is placed in the MAX position. Any other position of either the inner box or outrigger arm is classed as NOT MAX

If any of the outriggers do not meet the MAX criteria, the crane must be classed as NOT MAX

Improper set-up of the outriggers may cause the crane to tip over. Always place the outriggers on a firm and level surface, the use of steel road plates or wooden dunnage may be required. Always try to operate at maximum extension. Ensure that all lock pins are inserted and secured correctly

Use boom 1+2+3 where boom 3 is extended any distance from boom 2. Use boom 1+2+3+4 when boom extension 4 extends any distance from boom 3. Use boom 1+2+3+4+5 when the mark on the side of boom 4 moves away from boom 3

UCE.01.51.GB 295

UCE 01.51 295 Only

RATED LOAD CHART

Rated load is the lifting capacity including the weight of the hook

BOOM SECTION	1				
WORKING RADIUS (m)	1,0	1,1	1,2	1,3	1,41
RATED LOAD (t) OUTRIGGER MAXEXT	0,995	0,995	0,995	0,995	0,995
RATED LOAD (t) OUTRIGGER NOTMAXEXT	0,8	0,8	0,75	0,7	0,65

BOOM SECTION	1+2						
WORKING RADIUS (m)	1,0	1,1	1,3	1,5	2,0	2,5	2,69
RATED LOAD (t) OUTRIGGER MAXEXT	0,995	0,995	0,995	0,995	0,8	0,65	0,58
RATED LOAD (t) OUTRIGGER NOTMAXEXT	0,8	0,8	0,7	0,6	0,41	0,285	0,23

BOOM SECTION	1+2+3							
WORKING RADIUS (m)	1,0	1,8	2,0	2,5	2,8	3,0	3,5	3,93
RATED LOAD (t) OUTRIGGER MAXEXT	0,85	0,85	0,8	0,65	0,58	0,53	0,4	0,32
RATED LOAD (t) OUTRIGGER NOTMAXEXT	0,5	0,5	0,41	0,285	0,215	0,19	0,145	0,115

BOOM SECTION	1+2+3+4								
WORKING RADIUS (m)	2,4	2,5	2,8	3,0	3,5	4,0	4,5	5,1	5,17
RATED LOAD (t) OUTRIGGER MAXEXT	0,66	0,66	0,58	0,53	0,41	0,33	0,27	0,21	0,2
RATED LOAD (t) OUTRIGGER NOTMAXEXT	0,36	0,32	0,22	0,19	0,145	0,105	0,08	0,065	0,065

POINTS TO OBSERVE

The rated load is the performance when the crane is level and is based on the actual operating radius including boom deflection under load. The rated load is also based on the strength and stability of the crane

Maximum extension of the outrigger is when the inner box is extended to the maximum extension position and the lock pin in the outrigger arm is placed in the MAX position. Any other position of either the inner box or outrigger arm is classed as NOT MAX

If any of the outriggers do not meet the MAX criteria, the crane must be classed as NOT MAX

Improper set-up of the outriggers may cause the crane to tip over. Always place the outriggers on a firm and level surface, the use of steel road plates or wooden dunnage may be required. Always try to operate at maximum extension. Ensure that all lock pins are inserted and secured correctly

Use boom 1+2+3 where boom 3 is extended any distance from boom 2. Use boom 1+2+3+4 when the mark on the side of boom 3 moves away from boom 2

UCE.02.58.GB 094

UCE 02.58 094 Only

OUTRIGGER MODE INDICATOR LAMP

- CAUTION! When indicator lamp is lit the crane is in outrigger mode. No crane operations are possible

LAMP	OPERATION MODE	OPERATIONS POSSIBLE
ON	OUTRIGGER MODE	OUTRIGGERS ONLY
OFF	CRANE MODE	CRANE ONLY

UCE.02.61.GB URW376/506

UCE 02.61 094 / 095 / 295

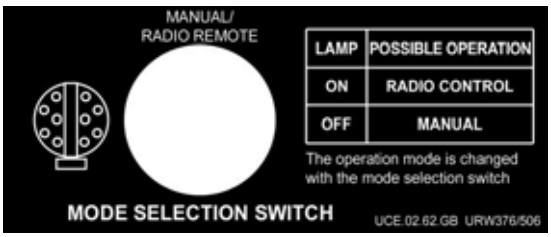

UCE 02.62 094 / 095 / 295

Searcher Hook If fitted – 095 / 295

NET RATED LOADS (FOR SEARCHER HOOK)

Working Radius(m)	Rated Load (kg) Outrigger Extend to Maximum	Rated Load (kg) Outrigger Extend to Not Maximum
3.5	300	300
4.0	300	220
4.5	300	170
5.0	300	120
5.5	300	90
6.0	260	60
6.5	220	50
7.0	180	PROHIBITED AREA OF CRANE OPERATION
8.0	130	
8.91	100	

⚠ CAUTIONS

- Net rated loads are performance when the crane is placed level and is based on actual working radius including boom deflection under loaded
- Net rated loads are also based on strength and stability of the crane.
- Net rated loads must be reduced in accordance with wind, ground condition and operation speed
- In order to make correct operation, read the instruction manual carefully before crane operation

URW 295/095 09EM37070

09EM 37070 095 / 295

09EM 37080 095 / 295

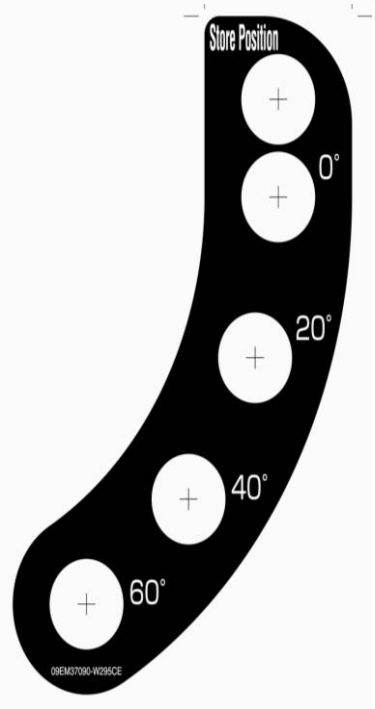

09EM 37090 095 / 295

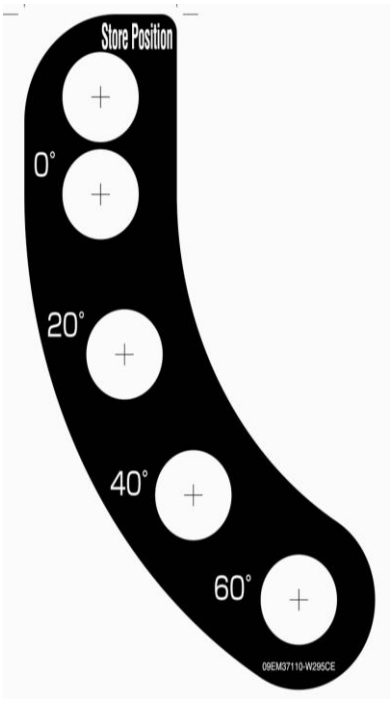

09EM 37110 095 / 295

7 DEFINITION OF TERMS

a. *Outrigger extension*

The outriggers on the URW 295 may only be set at the standard angles as shown below.
On the URW 094/095 models there are a number of optional angles that maybe selected other than standard. If the outriggers are used at any angle other than standard, reference MUST be made to the Prohibited Area of Crane Operations information plate (UCE 01.41[095] or UCE 02.41[094]).
The Prohibited Areas must be STRICTLY AVOIDED. If this warning is ignored the crane may tip over causing serious injury or death

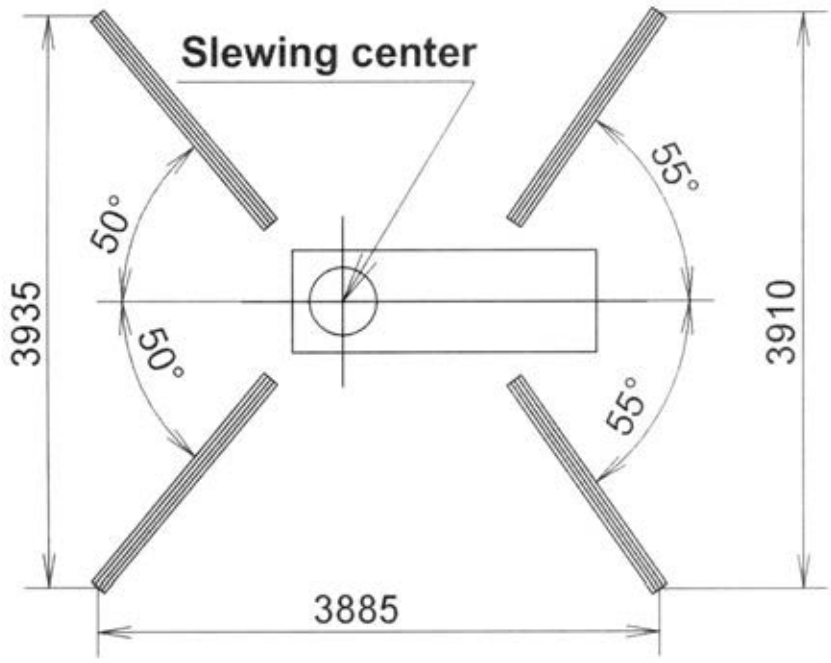

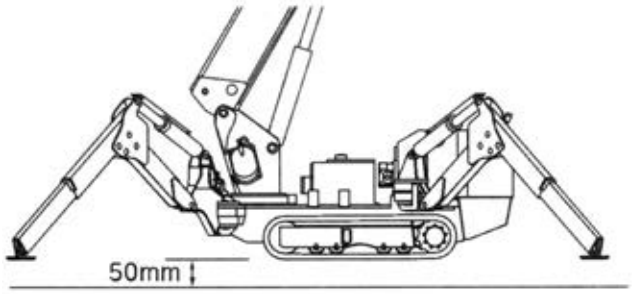

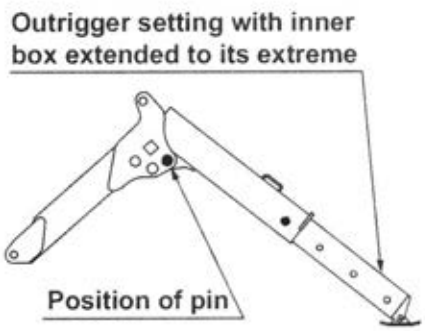

The figure above shows the outriggers extended to their extremes.
Carry out operations by first ensuring the outriggers are on firm, level and uniform ground. This may require the use of timber or steel plates. Extend the outriggers to

their fullest extent and raise the vehicle approximately 50mm from the ground, ensuring it is level in both horizontal axes.

Since the rated load varies according to how the outriggers are extended, the rated load has been set for 2 pre-determined extension positions.

The Figures below show the dimensions where the outriggers are set to ‘maximum’, or ‘other than maximum’.

Outriggers extended to maximum

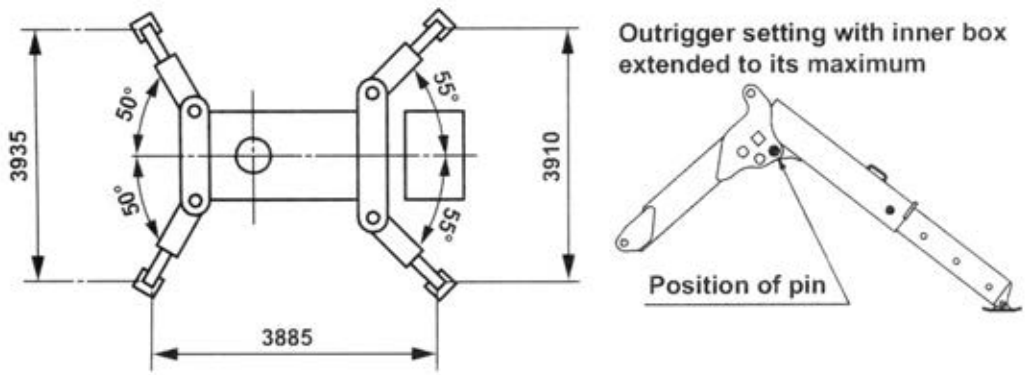

Example: Outrigger setting to a distance below maximum (Figure shows they are set to minimum extension).

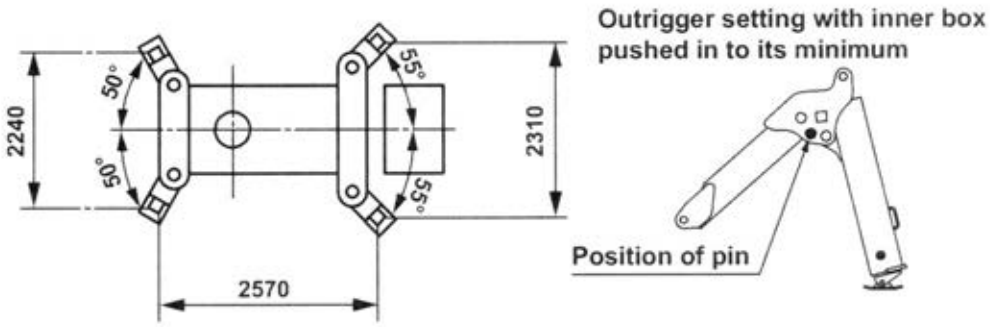

This example shows the dimensions for the 295 model

The rated load is shown for ‘Max Extension and ‘Not at Max Extension’. When using the URW 295 models, if any of the four outriggers are extended differently, the Safe Load Indicator will automatically change to the ‘Not at Max Extension’ duty. When using the URW 094/095 models in the same circumstance it must be operated by making reference to and using only the ‘Not at Max Extension’ rated load chart. Failure to do this could lead to tip over resulting in serious injury or death.

b. ***094 How boom sections are extended***

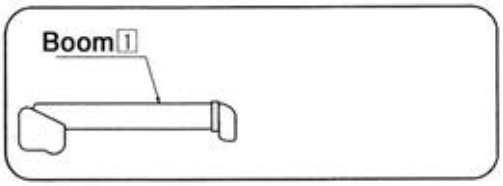

Boom : 1

All boom sections are retracted

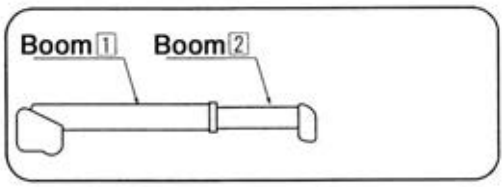

Boom : 1+2 or 2

Only boom section 2 is extended

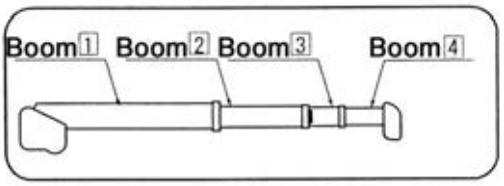

Boom : 1+2+3 or 3

Boom section 3 is extended to the mark ▉

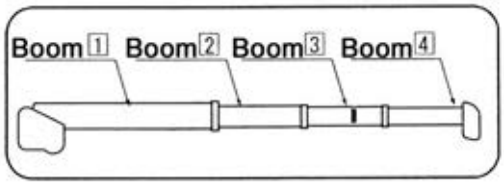

Boom : 1+2+3+4 or 4
Boom sections are extended until the mark on boom section 3 ▉ moves away from boom 2

095/295 How boom sections are extended

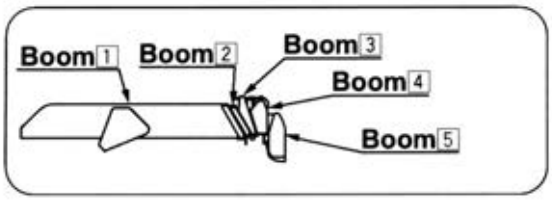

Boom : 1

All boom sections are retracted

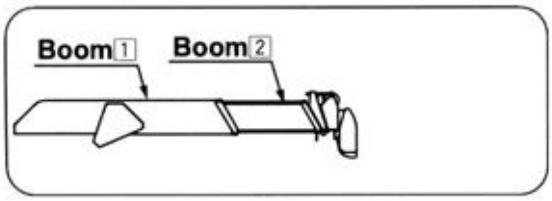

Boom : 1+2 or 2

Only boom section 2 is extended

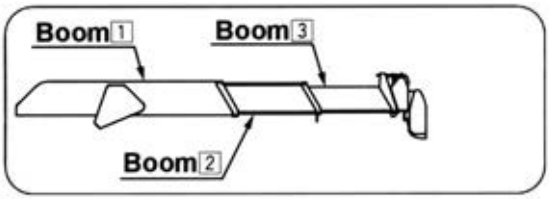

Boom : 1+2+3 or 3

Boom sections 2 and 3 are fully extended

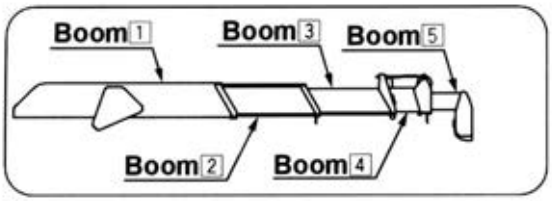

Boom : 1+2+3+4 or 4
Boom sections are extended until the mark on boom section 4 is just visible

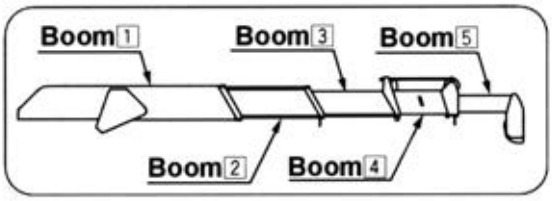

Boom : 1+2+3+4+5 or 5
Boom 5 is anywhere between the mark on boom section 4 being visible, and all sections being fully extended

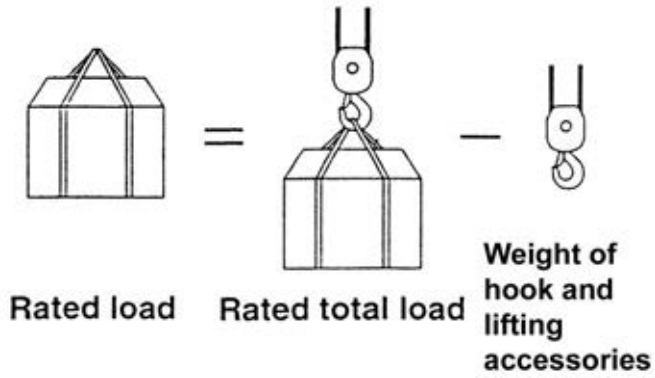

c. ***Rated Load***

Net load that can be lifted determined on the basis of crane stability

d. ***Rated Total Load***

Maximum load including hook and lifting accessories that can be lifted at a determined boom angle and boom length based on the stability of the crane

e. ***Hoisting Load***

This is the actual load being lifted

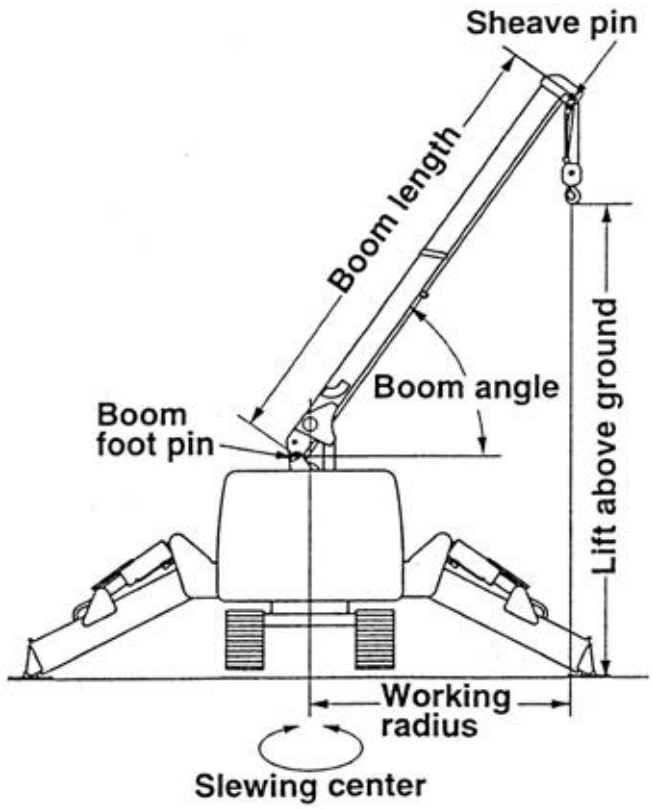

f. ***Working Radius***

This is the horizontal distance from the centre of rotation of the column to the centre of the hook

g. ***Boom Length***

This the distance from the boom foot pin to the sheave pin at the top of the boom

h. ***Boom Angle***

This the angle between a horizontal line drawn from the boom foot pin and the axis line of the boom

i ***Lift above ground***

This refers to the vertical distance between the bottom of the hook and ground level when the hook is wound up until it is touching the Overwind Alarm detector weight

Intentionally Blank

8 HOW TO REFER TO WORKING RANGE CHART AND RATED LOAD CHART

These charts are placed in front of the crane operation levers. The method of interpreting these charts is illustrated below.

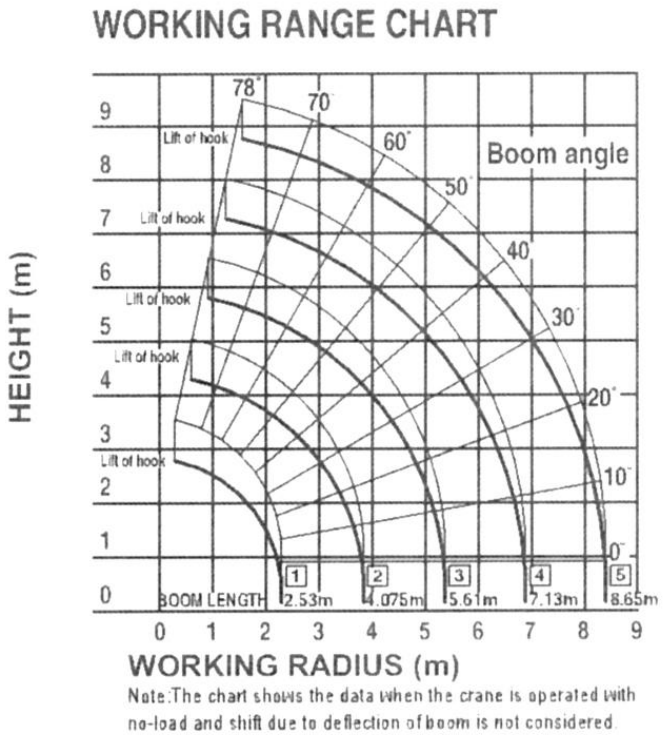

a. ***Working Range Chart***

This chart shows the relationship between boom length and working radius, boom angle and lift above ground

Important Note: This range chart is for information purposes only and is not a working document. Please refer to the Working Range Chart for your model of crane

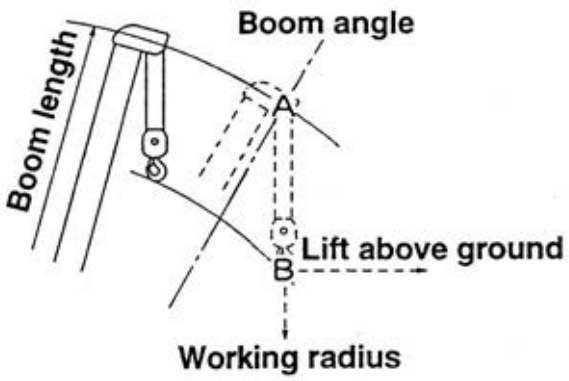

Although Point A and Point B follow the same track along the working radius, due to boom deflection Point A refers to the boom angle and Point B refers to the lift above ground

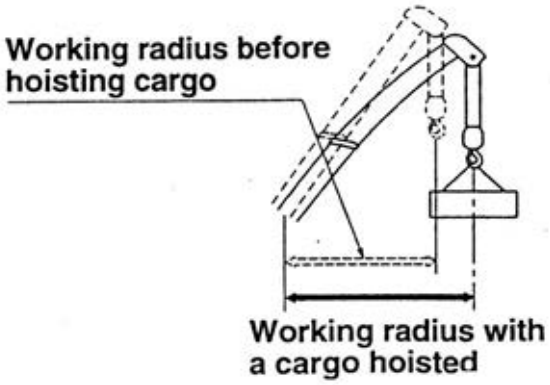

The working Range chart does not take into account of movement due to boom deflection.

Bear in mind that the actual working radius is somewhat greater due to this deflection when lifting a load.

b. ***Rated Load Chart URW094C***

This chart shows the load that can be lifted for a specified combination of boom length and working radius.

Boom-sections extended: 1

Working radius (m)		1,0	1,1	1,2	1,3	1,41
Rated load (t)	Outriggers extended to maximum	0,995	0,995	0,995	0,995	0,995
	Outriggers extended not to maximum	0,8	0,8	0,75	0,7	0,65

Boom-sections extended: 1+2

Working radius (m)		1,0	1,1	1,3	1,5	2,0	2,5	2,69
Rated load (t)	Outriggers extended to maximum	0,995	0,995	0,995	0,995	0,8	0,65	0,58
	Outriggers extended not to maximum	0,8	0,8	0,7	0,6	0,41	0,285	0,23

Boom-sections extended: 1+2+3

Working radius (m)		1,0	1,8	2,0	2,5	2,8	3,0	3,5	3,93
Rated load (t)	Outriggers extended to maximum	0,85	0,85	0,8	0,65	0,58	0,53	0,4	0,32
	Outriggers extended not to maximum	0,5	0,5	0,41	0,285	0,215	0,19	0,145	0,115

Boom-sections extended: 1+2+3+4

Working radius (m)		2,4	2,5	2,8	3,0	3,5	4,0	4,5	5,1	5,17
Rated load (t)	Outriggers extended to maximum	0,66	0,66	0,58	0,53	0,41	0,33	0,27	0,21	0,2
	Outriggers extended not to maximum	0,36	0,32	0,22	0,19	0,145	0,105	0,08	0,065	0,065

N.B. This not a working document. Refer to the charts fitted to your crane

The chart shows lifting capacity when the crane is set up level with the outriggers extended. The data is based on actual working conditions which incorporates movement due to boom deflection under load

The rated loads specified are based upon the strength of the crane and stability of the carrier.
Ensure that the rated load is correct for the extension of the outriggers

c. ***Rated Load Chart URW095C***

This chart shows the load that can be lifted for a specified combination of boom length and working radius.

Boom-sections extended: 1 & 1+2

Working radius (m)		1.0	1.4	1.5	1.8	2.0	2.5	3.0	3.5	3.835
Rated load (t)	Outriggers extended to maximum	0.995	0.995	0.995	0.995	0.995	0.995	0.995	0.995	0.9
	Outriggers extended not to maximum	0.995	0.995	0.995	0.995	0.995	0.65	0.49	0.35	0.25

Boom-sections extended: 1+2+3

Working radius (m)		2.2	2.5	2.9	3.0	3.5	4.0	4.5	5.0	5.37
Rated load (t)	Outriggers extended to maximum	0.995	0.995	0.995	0.995	0.995	0.8	0.65	0.52	0.43
	Outriggers extended not to maximum	0.8	0.65	0.53	0.5	0.38	0.28	0.22	0.16	0.12

Boom-sections extended: 1+2+3+4

Working radius (m)		3.4	3.8	4.0	4.5	5.0	5.5	6.0	6.5	6.89
Rated load (t)	Outriggers extended to maximum	0.85	0.85	0.75	0.6	0.5	0.42	0.36	0.32	0.27
	Outriggers extended not to maximum	0.42	0.34	0.3	0.25	0.19	0.14	0.1	0.08	0.06

Boom-sections extended: 1+2+3+4+5

Working radius (m)		3.8	4.1	4.5	5.0	5.5	6.0	6.5	7.0	8.0	8.41
Rated load (t)	Outriggers extended to maximum	0.55	0.55	0.45	0.37	0.31	0.27	0.23	0.2	0.15	0.13
	Outriggers extended not to maximum	0.35	0.29	0.25	0.2	0.16	0.13	0.1	0.07	0.04	0.03

N.B. This not a working document. Refer to the charts fitted to your crane

The chart shows lifting capacity when the crane is set up level with the outriggers extended. The data is based on actual working conditions which incorporates movement due to boom deflection under load

The rated loads specified are based upon the strength of the crane and stability of the carrier.
Ensure that the rated load is correct for the extension of the outriggers

d. ***Rated Load Chart URW295C***

This chart shows the load that can be lifted for a specified combination of boom length and working radius.

Boom-sections extended: 1 & 1+2

Working radius (m)		1.0	1.4	1.5	1.8	2.0	2.5	3.0	3.5	3.835
Rated load (t)	Outriggers extended to maximum	2.9	2.9	2.65	2.25	2.05	1.65	1.3	1.0	0.9
	Outriggers extended not to maximum	2.0	2.0	2.0	1.45	1.1	0.65	0.49	0.35	0.25

Boom-sections extended: 1+2+3

Working radius (m)		2.2	2.5	2.9	3.0	3.5	4.0	4.5	5.0	5.37
Rated load (t)	Outriggers extended to maximum	1.35	1.35	1.35	1.25	1.0	0.8	0.65	0.52	0.43
	Outriggers extended not to maximum	0.8	0.65	0.53	0.5	0.38	0.28	0.22	0.16	0.12

Boom-sections extended: 1+2+3+4

Working radius (m)		3.4	3.8	4.0	4.5	5.0	5.5	6.0	6.5	6.89
Rated load (t)	Outriggers extended to maximum	0.85	0.85	0.75	0.6	0.5	0.42	0.36	0.32	0.27
	Outriggers extended not to maximum	0.42	0.34	0.3	0.25	0.19	0.14	0.1	0.08	0.06

Boom-sections extended: 1+2+3+4+5

Working radius (m)		3.8	4.1	4.5	5.0	5.5	6.0	6.5	7.0	8.0	8.41
Rated load (t)	Outriggers extended to maximum	0.55	0.55	0.45	0.37	0.31	0.27	0.23	0.2	0.15	0.13
	Outriggers extended not to maximum	0.35	0.29	0.25	0.2	0.16	0.13	0.1	0.07	0.04	0.03

N.B. This not a working document. Refer to the charts fitted to your crane

The chart shows lifting capacity when the crane is set up level with the outriggers extended. The data is based on actual working conditions which incorporates movement due to boom deflection under load

The rated loads specified are based upon the strength of the crane and stability of the carrier.
Ensure that the rated load is correct for the extension of the outriggers

e. **Rated Load Chart – Searcher Hook 095 / 295**

	Net Rated Load (kg)	
Working Radius (m)	**Outrigger Extend to Maximum**	**Outrigger Extend to Not Maximum**
3.5	300	300
4.0	300	220
4.5	300	170
5.0	300	120
5.5	300	90
6.0	260	60
6.5	220	50
7.0	180	**PROHIBITED AREA OF CRANE OPERATION**
8.0	130	
8.91	100	

Intentionally Blank

9 DESCRIPTION OF CONTROLS

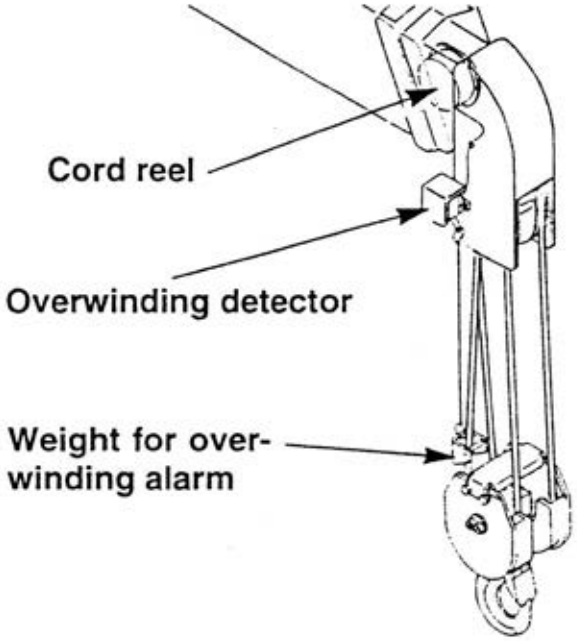

a. *Overwinding Alarm*

i. Function of overwinding alarm

The device automatically sounds the voice warning system (if the voice function is turned off it sounds a pulsed beep) and halts the selected function to prevent the operator overwinding the wire rope and causing damage to the sheaves, rope, hook block and possible loss of load.

Do not tamper with the length of the overwind alarm detector wire. This against the law and could also endanger life.

If the wires connecting the alarm at the top of the boom are broken, obviously the alarm will not function. Check the wires for breaks as part of your pre-use inspection.

INTERFERANCE WITH SAFETY SYSTEM PARTICULARLY THE ANTI-TWO SYSTEM, MAY LEAD TO DEATH AND WILL ALMOST CERTAINLY LEAD TO THE OPERATORS CRIMINAL PROSECUTION COMPLETE WITH ACCOMPANY FINE AND IMPRISONMENT

b. *Automatic Overwinding Stop*

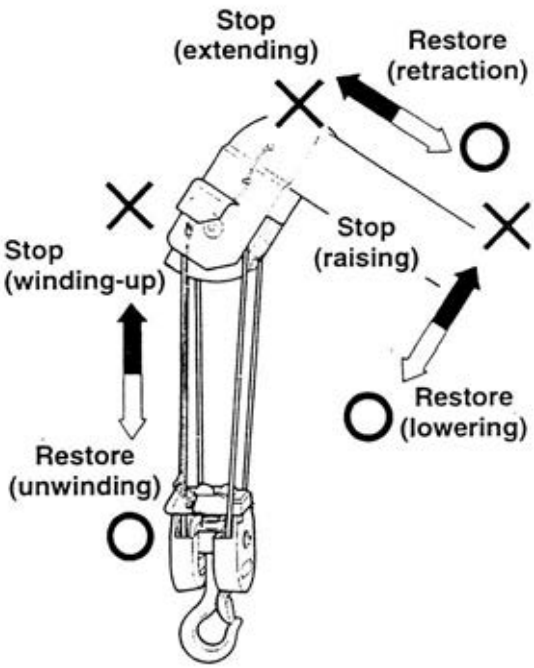

i. Function of Automatic Stop

When the overwinding alarm detector is touched by the hook, the automatic stop will halt the following functions, raising the hook, raising or extending the boom.

To allow normal actions to continue, reverse the control direction that caused the stop and alarm to function.

N.B. Since the viscosity of hydraulic oil increases in cold conditions the raising and lowering of the hook may not stop exactly where you release the controls. This may lead to it inadvertently hitting the automatic stop detector. Wait until the oil has reached its operating temperature range before carrying on operations.

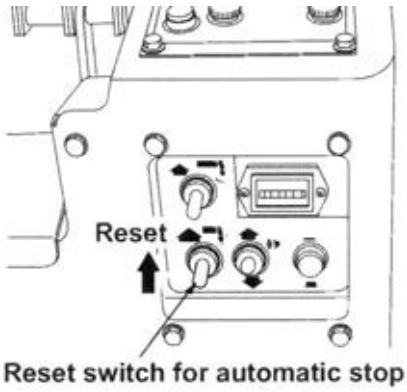

ii. Resetting the Automatic Stop if it is malfunctioning

If the crane cannot be operated due to automatic stop failure. Reset the automatic stop.

- Turn the automatic stop reset switch to 'Reset'. Raise the hook, extend or raise the boom. Stow the crane.

These are only temporary measures to enable the crane to be stowed. Ensure that the crane is repaired by an authorised UNIC dealer before using it again.

c. *Load Indicator (With Angle Indicator)*

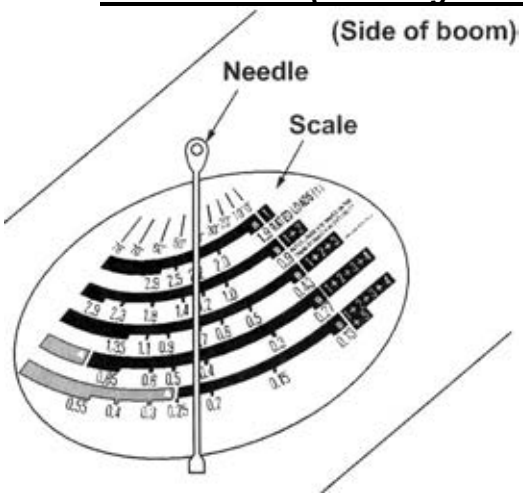

The indicator reads the rated load corresponding to the boom extension and angle. This is the maximum load that can be lifted at that point

The load indicator reads the rated load for fully extended outriggers. It cannot be used when the outriggers are at the 'other than maximum' position

Use the scale band according to the number of booms extended.

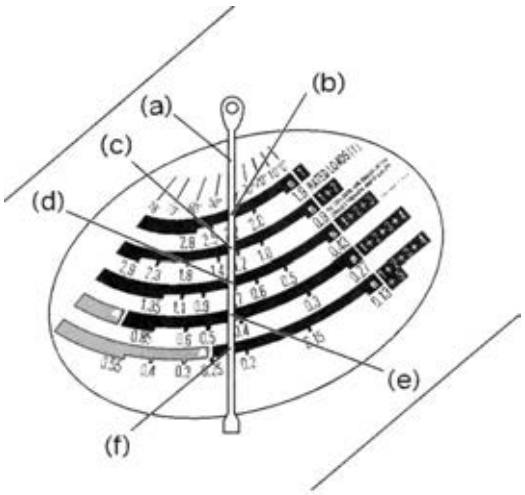

Example
The indicator needle reads 41° at point (a) on the boom angle scale.

Maximum load that can be lifted (rated load) reads:

Boom 1 2.2t at (b)
Boom 2 1.2t at (c)
Boom 3 0.7t at (d)
Boom 4 0.42t at (e)
Boom 5 0.22t at (f)

When any boom section is partially extended , treat it as a fully extended section.

- **When boom section 2 is extended from section 1 take the rated load for 1+2 (1.2t in the above example)**

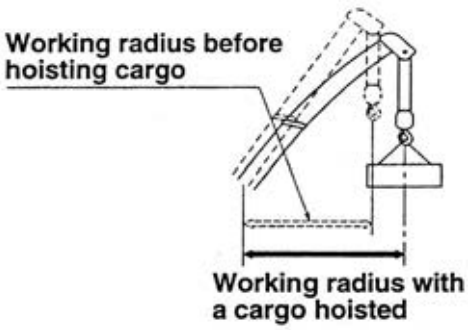

Since the working radius increases due to boom deflection when a load starts to be lifted, set the boom angle slightly inside the desired value

How to obtain the correct hoisting capacity when the outriggers are extended to other than maximum.

As a general rule the outriggers should always be extended to their maximum.

Otherwise obtain the capacity as shown below.

- Find the working radius.
- The rated load is found by using the 'outriggers extended to minimum' row according to the number of boom sections extended.

- Operating with a working radius of 3.5m with boom sections 1+2 and the outriggers extended to halfway or minimum the capacity is 0.35t

- Operating with a working radius of 3.0m with boom sections 1+2+3 and outriggers extended to halfway or minimum the capacity is 0.5t

Boom-sections extended: 1 & 1+2

Working radius (m)		1.0	1.4	1.5	1.8	2.0	2.5	3.0	3.5	3.835
Rated load (t)	Outriggers extended to maximum	2.9	2.9	2.65	2.25	2.05	1.65	1.3	1.0	0.9
	Outriggers extended not to maximum	2.0	2.0	2.0	1.45	1.1	0.65	0.49	0.35	0.25

Boom-sections extended: 1+2+3

Working radius (m)		2.2	2.5	2.9	3.0	3.5	4.0	4.5	5.0	5.37
Rated load (t)	Outriggers extended to maximum	1.35	1.35	1.35	1.25	1.0	0.8	0.65	0.52	0.43
	Outriggers extended not to maximum	0.8	0.65	0.53	0.5	0.38	0.28	0.22	0.16	0.12

The load indicator on the side of the boom cannot be used with the outriggers set at other than maximum

When the outriggers are set to unequal extensions the rated load is determined by using the 'outrigger not set to max ext'

d. ***Warning Horn***

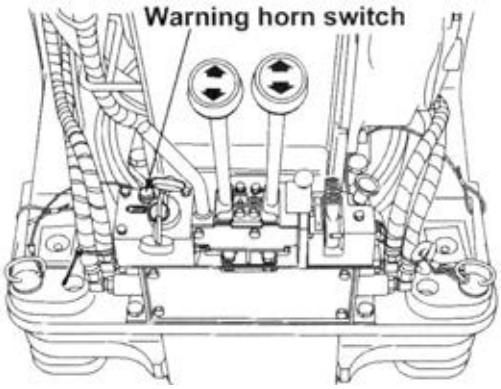

Press the warning horn button to warn people that an operation such as slewing is about to commence

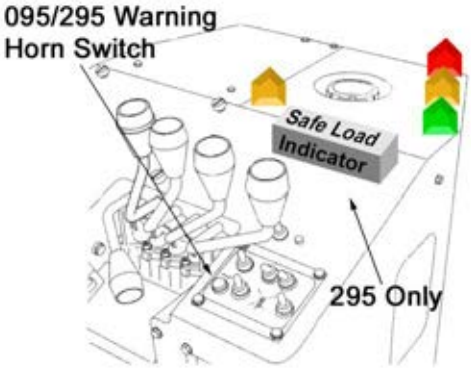

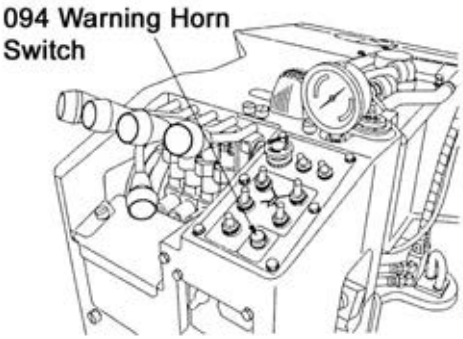

e. ***Hook Safety Catch***

The hook safety catch is used to retain lifting accessories in the correct place on the hook

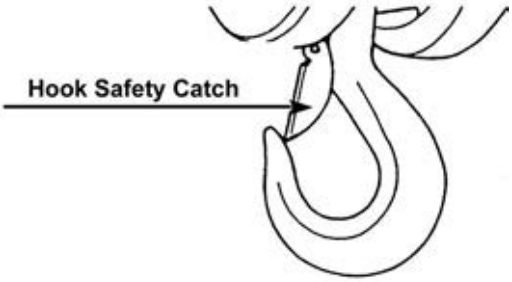

It is essential that all lifting accessories are seated correctly on the hook and the safety catch is closed fully

f. ***Automatic Wire Rope Stop***

This device prevents the wire rope on the drum from slackening when the hook makes an abrupt stop or when the hook/load is lowered to the ground.

In addition it stops the drum unwinding when the rope approaches only having 3 turns left on the drum, therefore preventing it unwinding fully

g ***Remote Control (Overview)***

The remote control is available as cabled or radio and is used to control crane functions only. It is used in situations where sighting of the load is difficult for the driver/operator whilst seated, or where the load may move into the designated danger area and put the driver/operator at risk from a falling load.

For further information see the remote control manual located as an annex at the rear of the manual.

h. ***Voice Announcement System***

The voice announcement system warns of different operating modes. In addition it also warns when the crane is performing movements that could lead to personal injury or crane failure.

1. When the ‘crane-outrigger’ switch is moved to crane the system vocalises:

   CRANE MODE, CRANE MODE

2. When the ‘crane-outrigger’ switch is moved to outrigger the system vocalises:

   OUTRIGGER MODE, OUTRIGGERS MOVING, OUTRIGGERS MOVING

3. When the overwind alarm weight is lifted by the hook block, either by winching the rope up or by telescoping the boom, the action is stopped by the overwind stop switch and the system vocalises:

   STOP WINCH UP, STOP WINCH UP

4. When the hook store button is pressed, either on the crane or the remote control, the system vocalises

   SECURING LIFTING HOOK, SECURING LIFTING HOOK

5. When the boom is raised and reaches approximately 75° the action is stopped and the system vocalises:

   DON’T WINCH UP, DON’T WINCH UP

6. When the radio remote control is activated or the cable remote control is plugged in and the remote control button is pressed the system vocalises:

   REMOTE CONTROL READY, REMOTE CONTROL READY

Intentionally Blank

10 CARRIER OPERATIONS

a. *Designation and location of control levers*

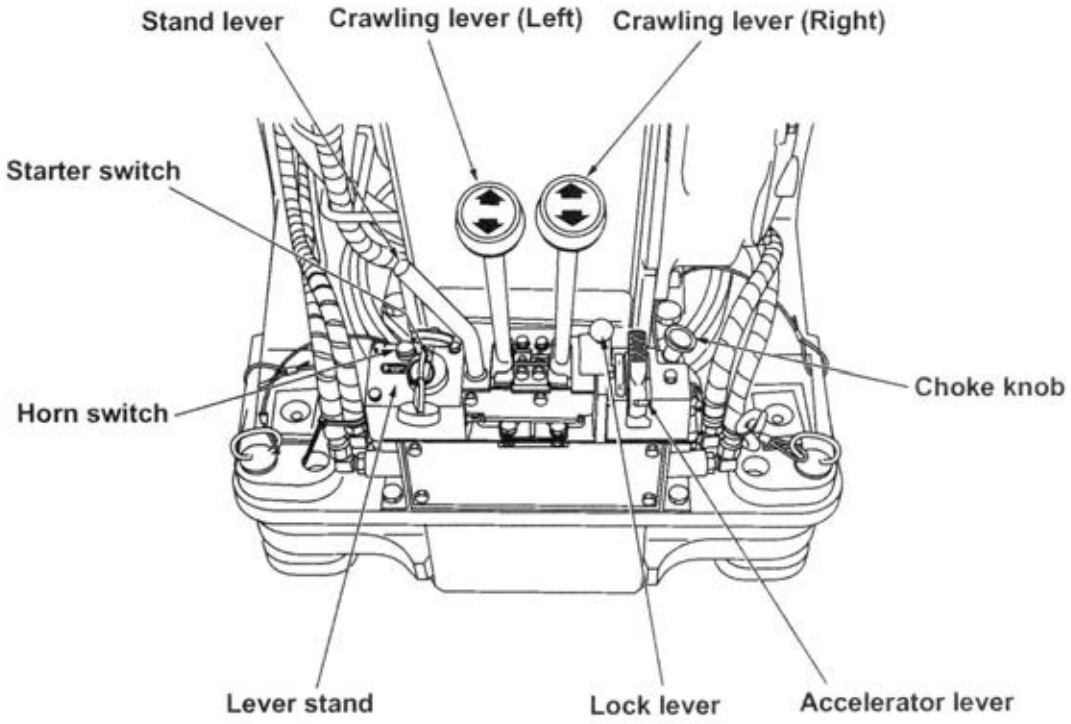

b. *Before Use*

DO NOT Start or run the engine in confined or closed spaces unless using the LPG option. Ensure there is adequate natural ventilation, if not, forced ventilation MUST be provided. Danger of death from suffocating fumes is EXTREMELY high.

DO NOT Start the engine until you have cordoned the area and confirmed there are no non-essential personnel nearby. Danger is from inadvertent movement of the boom or hook

NB

Heavy duty operation of the crane whilst new may lead to poor performance and a dramatically reduced in-service life. Avoid abrupt starting, acceleration and continuous heavy operation for the first 100 hours

- Shift the crawling lever stand to the ‘Crawl’ position.

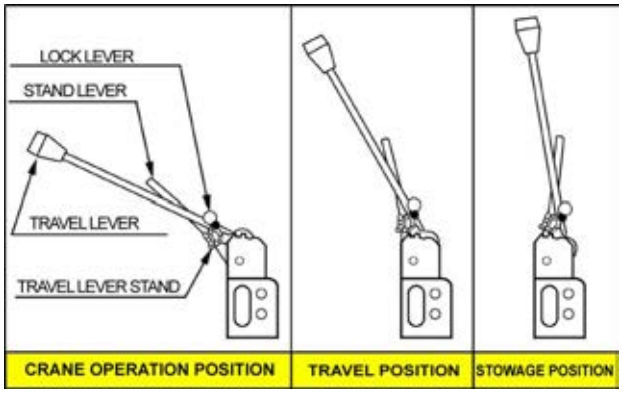

- Ensure both crawling levers are in the neutral position
- Confirm that the machine is correctly configured for crawling
  - Boom is lowered fully
  - Outriggers are correctly stowed and locked
  - Hook is correctly stored
- Open the fuel tap
- Adjust the accelerator position to just above idling

c. ***Operation***

NB

Continuous running of the starter motor will discharge the battery and damage the motor. Do not run the starter for more than 20 seconds at a time.
If it does not start wait at least 1 minute before retrying

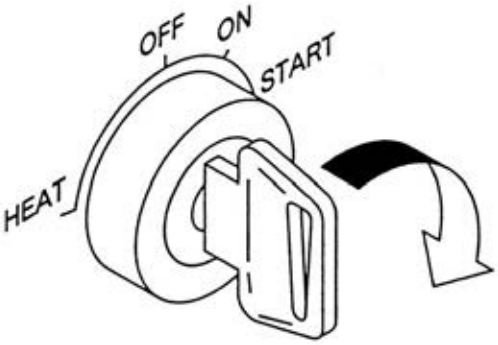

i. ***Starting the engine under normal conditions***

- Insert the key and turn it to the 'ON' position
- Pull the accelerator lever a bit and also pull the choke knob if the engine is cold. Return the choke knob to its original position once the engine has started
- Turn the key to 'START' position
- Release the key

ii. Changing between Petrol/Gasoline and LPG

- Turn on gas cylinder
- Move fuel selector switch from Petrol to LPG

iii. Changing between LPG and Petrol/Gasoline

- Turn off gas cylinder
- Move fuel selector switch from LPG to Petrol

ii. ***Starting the engine in cold weather***

- Pull the choke knob and adjust the accelerator to somewhat higher than the idle position
- Turn the key to 'START', release it immediately the engine starts
- When the engine is firing evenly, slowly return the choke knob to its original position
- Adjust the accelerator to the slowest speed where the engine runs smoothly
- Once the engine is running smoothly ease up the accelerator until the engine is idling evenly

iii. ***After the engine has started***

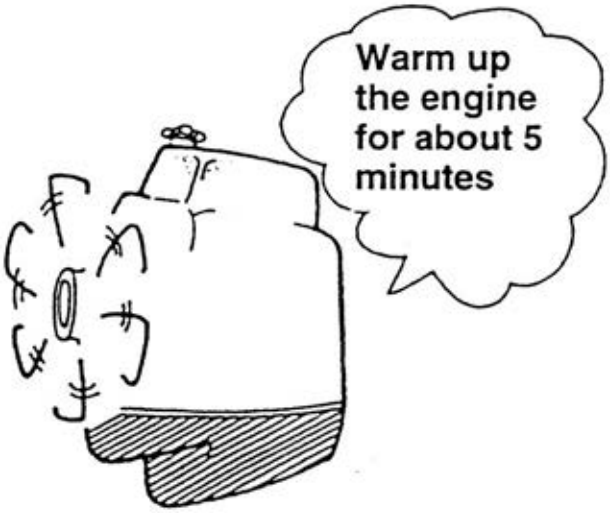

- After idling the engine for approximately 5 minutes to warm up, move each lever with the accelerator positioned halfway to warm up the hydraulic system. This allows the hydraulic oil to circulate and lubricate the system but also allows the engine to warm up to operating temperature gradually.
- Check the engine for unusual vibration, noise, odour and colour of the exhaust gas. If there are any doubts contact UNIC Cranes Europe Ltd.
- Check the hydraulic equipment and engine for oil leakage

d. ***Crawling Operations***

DO NOT drive the crane until the area around the crane has been checked for persons or obstacles. Use assistance.

DO NOT attempt to move the vehicle until the boom is fully retracted and stowed correctly

DO NOT attempt to move the vehicle until the outriggers are stowed and locked correctly

DO NOT park the vehicle over areas that may catch fire due to the heat of the exhaust, e.g. dry grass, straw, cloths, etc.

Crawl as slowly as possible when turning or crawling on rough terrain.

Stop the engine, remove the key and move the crawling lever stand to the stowage position. If you are leaving the vehicle for a long period chock the tracks. If you are parked on a public road, barriers and flashing lights must be used to warn other road users of its presence

When performing a spin turn (turning on the spot) decrease engine speed and operate in a slow and smooth manner. Fast and abrupt turns cause damage to the tracks, cause the crane to bounce which may lead to the crane overturning with possibly fatal results

NB

When operating in, or fording water ensure you do not exceed the maximum permissible depth which is the midline of the tracks

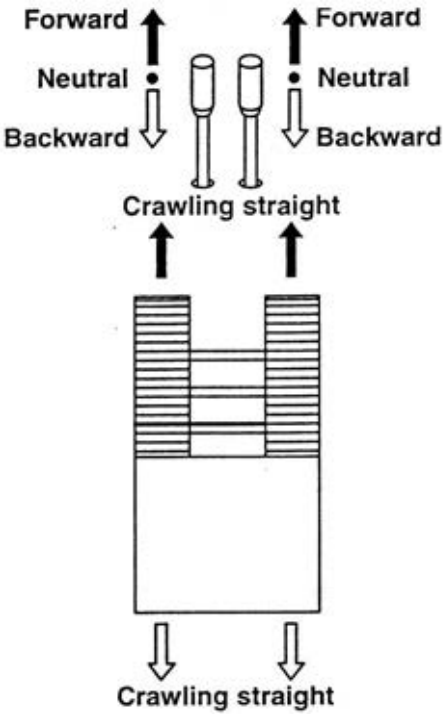

i. Crawling in forward and reverse

- To crawl forward: push both levers away from you (forwards). They should both travel the same distance to ensure you do not crawl in a curve.
- To crawl in reverse: pull both levers toward you.

When crawling, fine speed adjustment is carried out by moving the levers away from neutral (faster) or towards neutral (slower).

Coarse speed adjustment is by way of altering the accelerator with the levers in the desired direction.

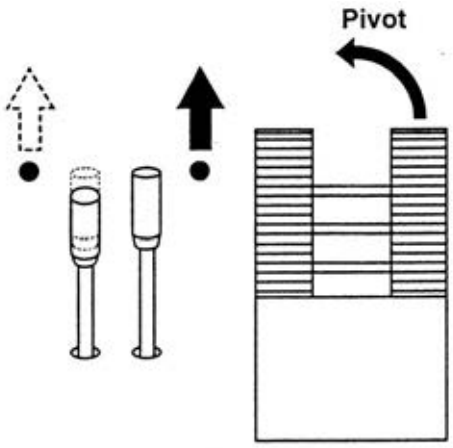

ii. Making a turn

Making a turn while the crane is crawling

- When moving forward: moving the left hand lever to neutral causes the crane to turn to the left and vice versa.
- When moving backwards: moving the left hand lever to neutral causes the crane to turn to the right and vice versa.

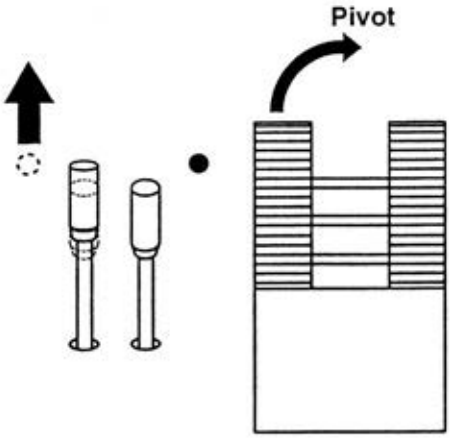

Making a turn while the crane is stationery

- Pushing the left hand lever away from you causes the crane to turn right and vice versa.
- Pulling the left hand lever towards you causes the crane to turn left and vice versa

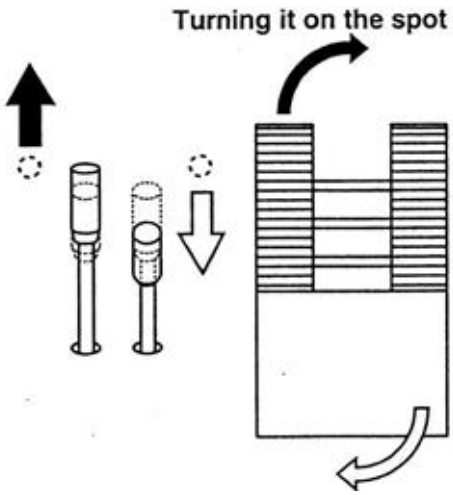

Making a turn on the spot

- Pushing the left hand lever away from you while pulling the right hand lever towards you at the same time causes the crane to spin on its own centre axis to the right (or clockwise) and vice versa

Intentionally Blank

11 CRANE OPERATIONS

a. *094 Description and location of the control levers*

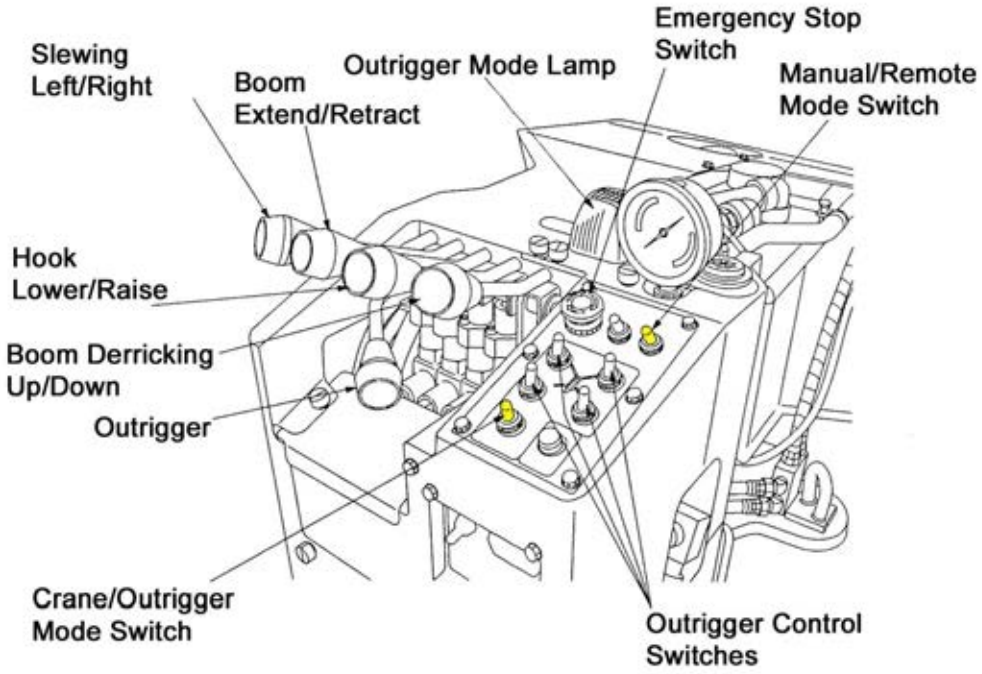

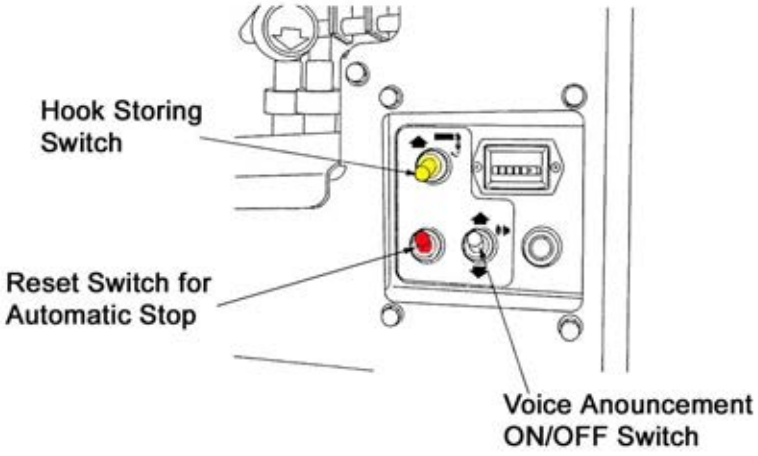

095/295 Description and location of the control levers

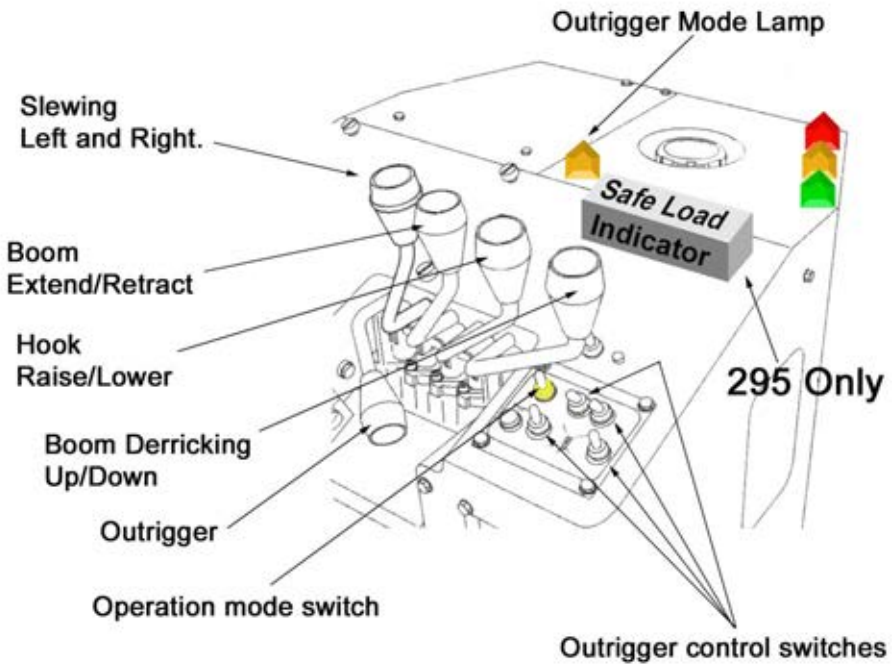

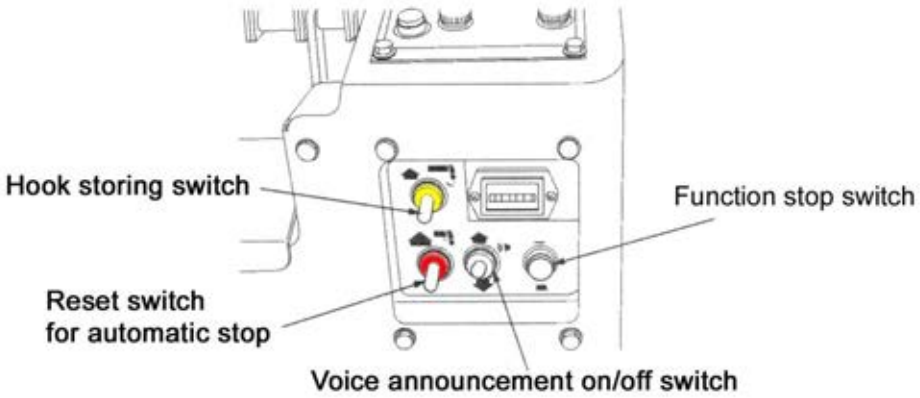

WARNING the Function Stop Switch does not operate as an Emergency Stop Switch. When pressed it will immediately stop any crane functions, but **DOES NOT STOP THE ENGINE**

b. ***Before operation***

DO NOT allow anyone to stand near the hook when it is released from stowage position. As the hook may swing when released, anyone standing close, may be struck by the hook.

During cold weather always allow the engine to run for 5 minutes after start up. This allows the hydraulic oil to reach operating temperature. This ensures smooth, consistent, predictable and SAFE operation of the crane. Also, as the viscosity of the oil is higher during cold weather, high speed running of the pump will lead to incorrect circulation of the oil and almost certainly lead to pump failure.

- Make sure that all of the outrigger control switches are in neutral position.
- Start the engine.
- Move the lever stand to the ‘Crane ‘ position
- Use the ‘Hoisting-Lowering Hook’ lever to release the hook from its auto-stow position.
- The crane is now ready to operate.

c. ***Outrigger set-up procedures***

Any operation of the crane without the outriggers set-up in accordance with these instructions is STRICTLY PROHIBITED.

DO NOT set-up the outriggers on uneven or soft ground, nor where the outrigger would be on a slope. If the surface is soft, uneven or sloped always ensure that a support such as a steel road plate or adequate timber dunnage is placed under the outrigger foot. This must stop the outrigger foot from moving, sliding or sinking under load. If this is not done it could lead to reduced rated load and/or tipping of the crane.

DO NOT forget to change the rated load according to the extension of the outriggers, maximum or minimum. This will cause a tipping hazard. Consult the Rated Load chart in front of the operators position.

ALWAYS ensure the locking pin is in place when extending or storing the outriggers to stop the outrigger inadvertently rotating. In an extension situation failure to do so could cause the leg to rotate under load, leading to crane collapse. Failure to use the locking pin when stowing may lead to the leg rotating during crawling and creating a striking hazard.

DO NOT place your foot or any other body part under the outrigger when extending. This is a severe crushing hazard.

DO NOT put fingers near the inner box sections when retracting, this is a severe nip hazard. Similarly, when stowing the outriggers a potential nip hazard exists between the outrigger/carrier or outrigger/outrigger. Therefore always ensure you use both hands on the handles provided.

ALWAYS extend the inner box section of the outrigger first before extending the upper cylinder. Retract in reverse order.

ALWAYS set-up the crane on firm, level and uniform ground and then raise the carrier until the bottom track is approximately 50mm above the ground.

NB

On CE specification URW295 models the outriggers cannot be extended when stowed. Neither may crane operations be carried out until the outriggers are correctly set up. The URW095 cannot be operated until all outriggers are in contact with the ground and pressure has been applied to them. On the URW094 models the outriggers must be in the open position before crane operation can commence

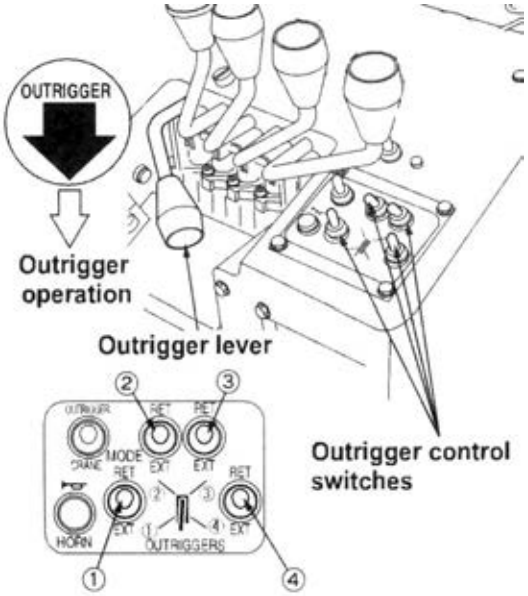

There are four switches and one lever used for outrigger.

- Select the outrigger and its function i.e. extend or retract and then use the outrigger lever to carry out that function.

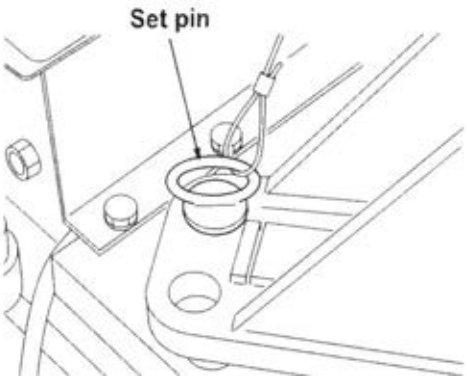

Set-up the outriggers as follows:

- **094/095** Extract the set pin and manually rotate the outrigger to line up the arrow with the desired hole. Insert the pin securely.

- **295** Extract the set pin and manually rotate the outrigger to line up the arrows. Insert the pin securely.

- Remove the lock pin (1) and raise the arm to the 'max ext' or 'not max ext' position as required and re-secure with the lock pin and clip pin.

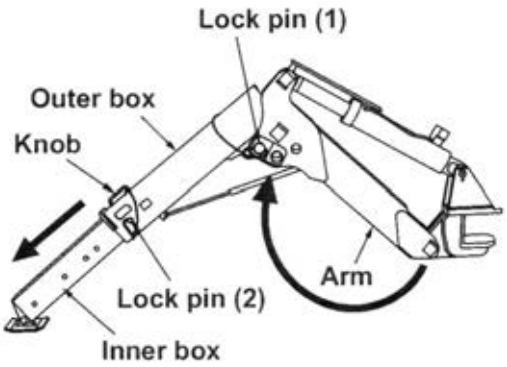

- Remove the lock pin (2) and pull out the inner box. Re-secure with the lock pin and clip pin.

- Repeat for all outriggers.

- Select all 4 vertical cylinder controls and use the outrigger lever to raise the bottom track approximately 50mm from the ground.

- De-select the vertical cylinder controls and re-select them individually to level the crane in both axes.

Insert each set pin securely when the outriggers are being set up or stowed. Insufficient insertion of the set pin may allow the pin to be dislodged. This may cause rotation of the leg under load and collapse or tip over of the crane.

This is especially important on the 094/095 where more outrigger positions are possible. Some pin positions are not as visible and it is therefore essential that the correct insertion of the pin is checked both visually and manually

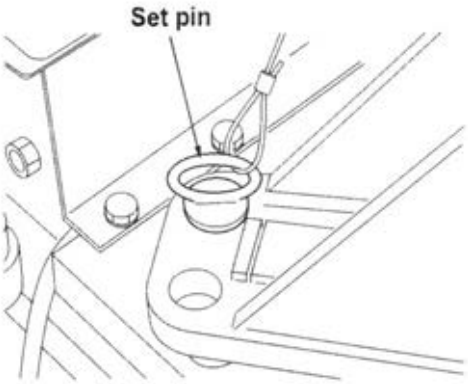

After the relevant lock pin has been inserted. Be sure to replace the stopper pin in the recess to securely retain the lock pin. Failure to replace the stopper pin correctly may lead to the lock pin working loose which will cause collapse of the outrigger and the crane to tip over.

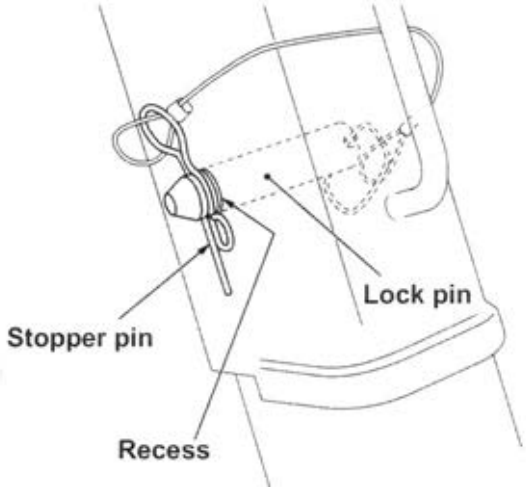

Outriggers extended to maximum

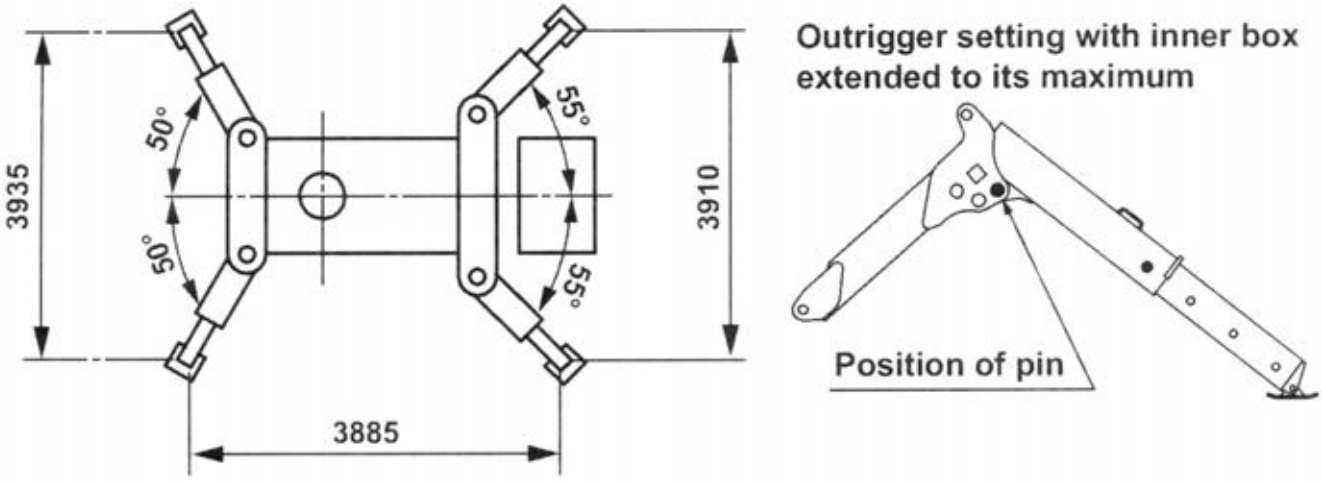

Example: Outrigger setting to a distance below maximum (Figure shows they are set to minimum extension).

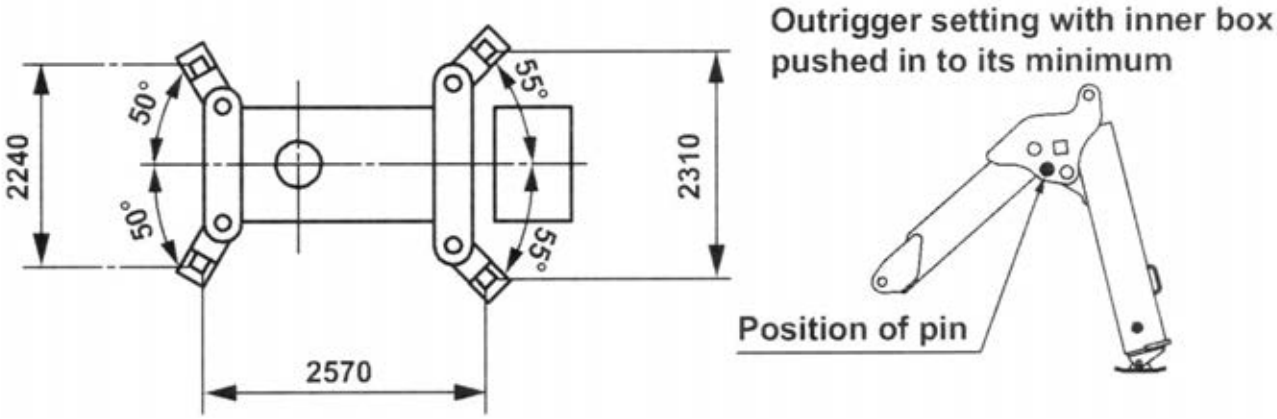

This example shows the 295 model, refer to the chart on the crane for more information.

d. *Operating boom for derricking (raising and lowering)*

DO NOT cause the crane to start or stop abruptly this may cause excessive shock to the crane which could cause the load to be lost, the crane tipping over or at least damage to the crane.

DO NOT FORGET, when lowering the boom with a load attached the working radius increases which decreases the capacity. Check the readings on the load indicator to confirm the safety margin before lowering commences.

The longer the boom is extended the faster the load is raised and lowered by a boom derricking operation. The controls are fully proportional, i.e. the further you push or pull the faster it goes. Operate the controls slowly and smoothly.

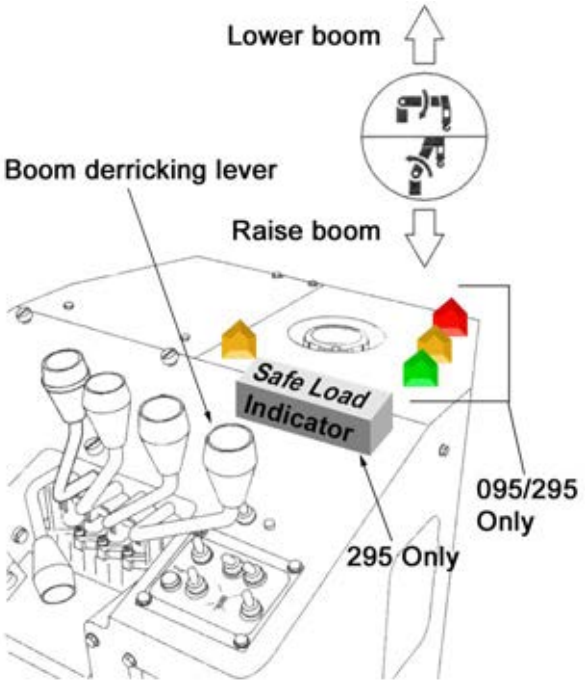

To operate boom derricking:

- Push the lever to 'LOWER' to lower the cargo.
- Pull the lever towards 'RAISE' to lift the load.
- To stop either operation return the lever to the neutral position.
- **295 Only** The Zero Angle Switch fitted on the boom near the kingpost will stop the boom being lowered past the 0° level. The High Angle Switch will stop the boom being raised beyond 78°
- **DO NOT release the lever suddenly except in an emergency situation. Always return it to neutral under control.**

e. *Winding the hook up and down*

DO NOT allow the hook to be overwound. Allowing the hook to bind against the top of the boom can cause serious damage to the wire rope and the sheaves, which may cause the load to be released

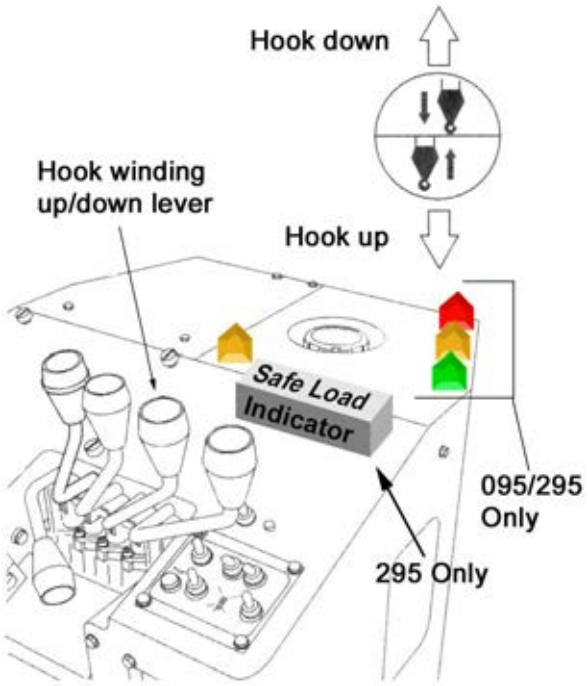

To wind up and down:

- Push the lever to' DOWN' to lower the cargo.
- Pull the lever towards 'UP' to raise the load.
- To stop either operation return the lever to the neutral position.
- **DO NOT release the lever suddenly except in an emergency situation. Always return it to neutral under control.**.

Paying out more rope once the load or hook has reached the ground causes the rope to unwind off the drum. If the rope is taken up it will be wound on irregularly. This will cause the top layers to put undue pressure on the layers below. This will damage the rope leading to a dangerous condition and seriously shorten the life of the rope.

If the rope does unwind off the drum, hoist the rope slowly and manually feed the rope onto the drum ensuring it is tightly and evenly wound.

When unwinding rope further than ground level, such as over building edges or into excavations or underground workings, ensure that at least 3 turns of rope are left on the drum.

If the hydraulic oil temperature becomes excessive all crane operations must cease immediately until the oil has reached its normal operating temperature again. The oil is prone to overheating when the hoist and lower is repeatedly operated, particularly with long lifts.

f. ***Telescoping the boom***

DO NOT operate without the overwind alarm operating correctly. When the boom is extended the hook raises. If the overwind alarm is not working the hook will bind against the top of the boom causing serious damage to the wire rope and the sheaves, which may cause the load to be released

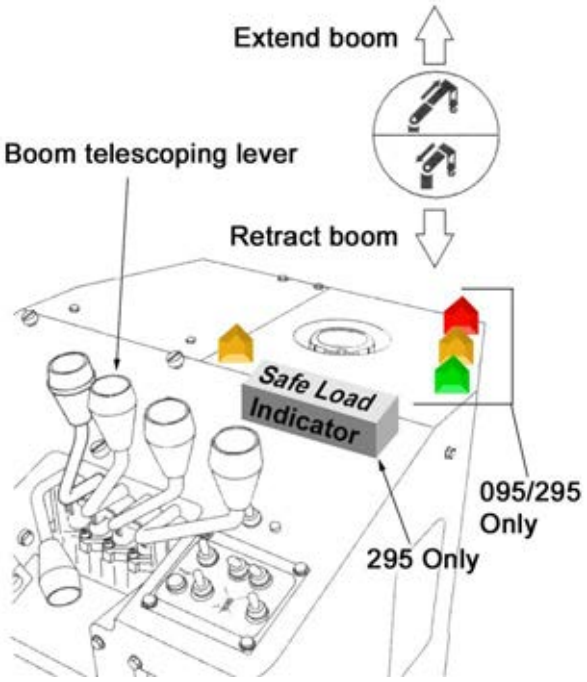

To operate boom extension/retraction:

- Push the lever forward to extend the boom.
- Pull the lever backwards to retract the boom.
- To stop either operation return the lever to the neutral position.
- **DO NOT release the lever suddenly except in an emergency situation. Always return it to neutral under control.**

g. ***Slewing the boom***

DO NOT race the engine during slewing operations

DO NOT make abrupt starts and stops. This will cause the load to swing and may cause personal or material damage by striking someone or something. It may even lead to tipping of the crane. Always operate controls slowly and smoothly.

The longer the boom length and the smaller the derricking angle, the faster the load will move during slewing. The faster the load moves, the greater the inertia, the harder it is to stop the load and the more violently it will swing. This will cause a serious risk to all operating near the crane. Always slew at a speed consistent with the configuration of the crane and load.

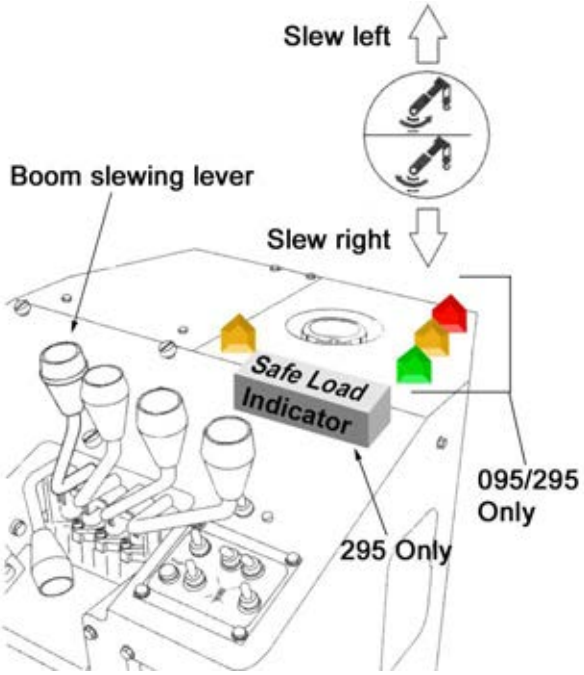

To slew the crane:

- Pull the lever to to slew the boom clockwise.
- Push the lever towards to slew the boom anti-clockwise.
- To stop either operation return the lever to the neutral position.
- **DO NOT release the lever suddenly except in an emergency situation. Always return it to neutral under control.**
- 'Slew right' means slewing the boom in the same direction as the hands of a clock would move (if the crane was seen from above) i.e. 'clockwise'.
- 'Slew left' means slewing the boom in the opposite direction to the hands of a clock (if the crane was seen from above) i.e. 'anti-clockwise' or 'counter-clockwise'.

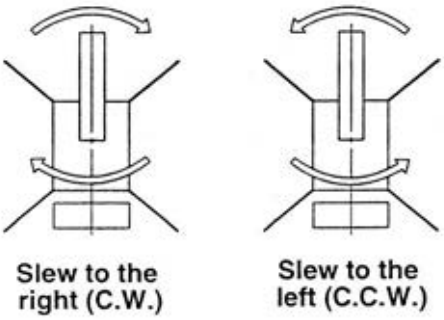

h. ***Storing the boom***

All European models of the URW095 and URW295 are now fitted with a switch that prevents the boom slewing and/or lowering onto the control levers and damaging them, or possibly jamming the boom. Although the 095CR has the flat layout of the control levers, if the electric pack option is fitted, changing it to 095CR(E), then the upright (295 type) levers must be fitted. This reintroduces the potential boom strike problem, that is why all models are fitted with the anti strike switch.

a. Anti Strike Switch

The switch box is located on the battery frame and has a spring mounted sensor finger projecting upwards into the path of the boom. Should the boom either lower onto the finger and depress it, or slew into it and displace it from its central position the power from the engine will immediately be reduced from Full Power to Slow Down Mode. The selected function of the boom in the chosen direction will then stop. The only available direction will be away from the switch allowing it to return to its neutral position.

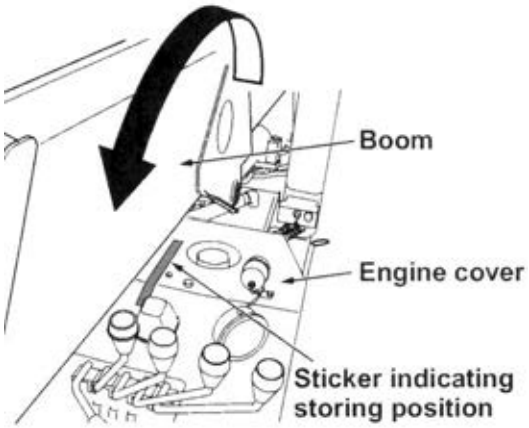

- **295** Retract the boom
- Slew the boom in a clockwise direction to the rear of the engine compartment
- Lower the boom to an angle of approximately 2 to 3 degrees (this can be read on the SLI)
- Align the boom with the sticker on the engine cover
- Store the hook
- Lower the boom fully

- **094/095** Retract the boom
- Slew the boom in a clockwise direction to the rear of the engine compartment
- Lower the boom until it stops
- Align the boom with the sticker on the engine cover
- Store the hook

i. ***Stowing the hook***

DO NOT stow the hook until all boom sections have been retracted and the boom has been stowed correctly

- Wind up the hook with the hook up/down control until the overwind alarm sounds
- Stop winding up
- Use the hook storing switch to continue winding up the hook
- **It is vitally important that you watch the hook continuously during this operation**
- When it achieves its stowage position release the hook storage lever immediately, otherwise the rope may be damaged

j. ***Storing the outriggers***

DO NOT store outriggers before boom has been stored.

DO NOT retract the inner boxes until the vertical cylinders have been retracted fully

When extending or storing the outriggers ALWAYS ensure the locking pin is in place to stop the outrigger inadvertently rotating. In an extension situation failure to do so could cause the leg to rotate under load, leading to crane collapse. Failure to use the locking pin when stowing may lead to the leg rotating during crawling and creating a striking hazard.

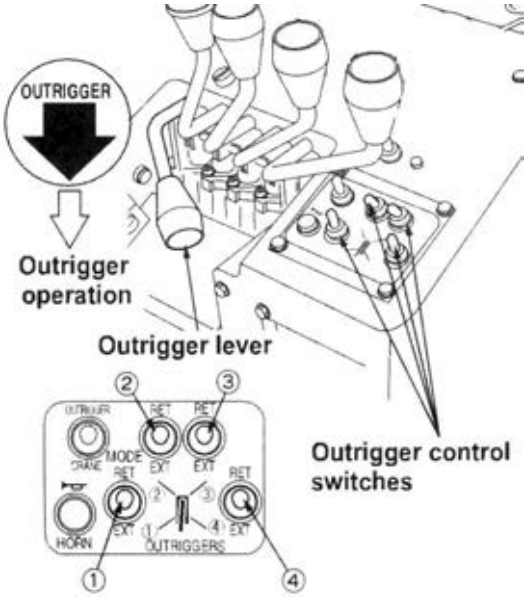

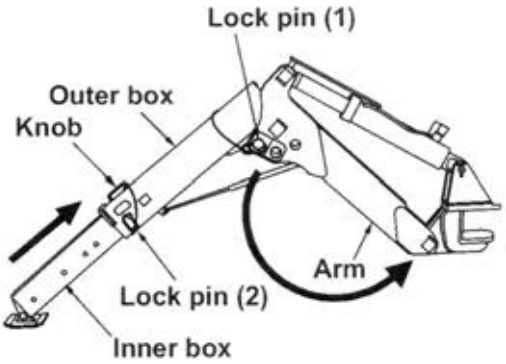

- Retract the vertical cylinders fully
- Remove the locking pins (2) and retract the inner boxes fully
- Re-insert the locking pins, ensuring that they are properly in place and secured with the stopping pins
- Remove the locking pin (1) and push the outer box to its storage position and re-secure with the locking pin
- Re-insert the locking pins, ensuring that they are properly in place and secured with the stopping pins
- Remove the set pins and manually rotate the outriggers to their storage position
- Re-insert the set pins, ensuring that they are securely in place
- Repeat for all outriggers
- Return all outrigger control switches to their neutral position

k. ***Emergency Lowering (where fitted)***

On certain models, primarily for lifting persons, an emergency lowering pump is fitted as shown below.

12 MAINTENANCE AND INSPECTION OF CARRIER

DO NOT carry out any maintenance work until power to the crane and carrier is isolated. A 'MAINTENANCE IN PROGRESS' warning signboard must be hung over the controls in the drivers position prior to any maintenance work being carried out.

NB

All replaceable items must be replaced according to the criteria outlined in this manual. Failure to do so may cause damage to the machine and will invalidate any current warranties.

NB

When parts need replacing (other than running spares) or anything abnormal is found, contact your local UNIC dealer for, inspection, replacement or advice.

a. Pre-use Inspection

ENSURE the engine is stopped, the boom and outriggers are stowed prior to carrying out this inspection.

NO SMOKING during inspection or maintenance.

DO NOT carry out any inspection or maintenance until all working parts have cooled down sufficiently

In order to ensure that the vehicle works correctly, efficiently and safely inspect each part of the carrier in accordance with the table below.

Device	Servicing item	Device	Servicing Item
Engine	Fuel Leakage Remaining fuel quantity Engine oil quantity/filling up Battery electrolyte solution level check Unusual vibration. Noise. Loose bolts. Broken bolts	Hydraulic oil tank	Oil leaks. Oil quantity. Filling up
		Interlock for crane-crawl lever	Function
		Crawling lever	Slack. Travel
		Wheel Sprocket	Loose bolts
		Rubber crawler	Cracks. Damage. tension
		Frame	Bends. Cracks. Deformation
		Truck roller	Loose nuts. Oil leaks

i. Check for remaining fuel quantity/Draining water

NO SMOKING The fuels, both petrol (gasoline) and liquefied petroleum gas (LPG or Propane) are extremely flammable. If there is a fire the LPG container may explode adding a risk of shrapnel injury to that of fire.

Absorb and/or wipe up fuel after spillage. Wash down area thoroughly. Spilt fuel is a fire hazard. It also increases the risk of personnel slipping and injuring themselves

- When refuelling, remove the filler cap and ALWAYS ensure the fuel strainer is in place to prevent the ingress of debris and moisture.
- When changing the gas cylinder always ensure the cylinder valve is turned off first.

N.B. The gas pipe spigot that is removed from the cylinder to fit into the new one has a LEFT HAND THREAD.

094 Fuel System

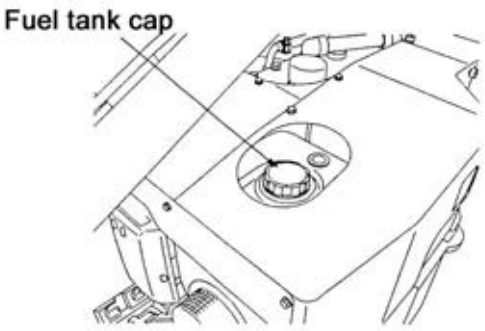

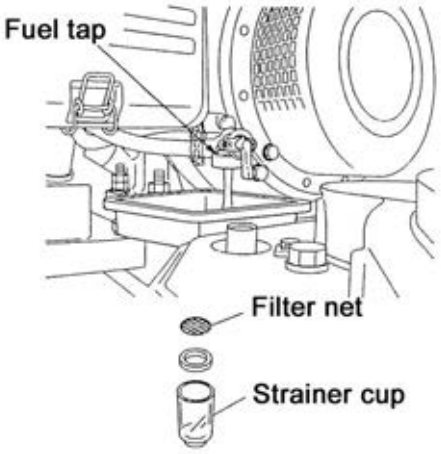

095/295 Fuel System

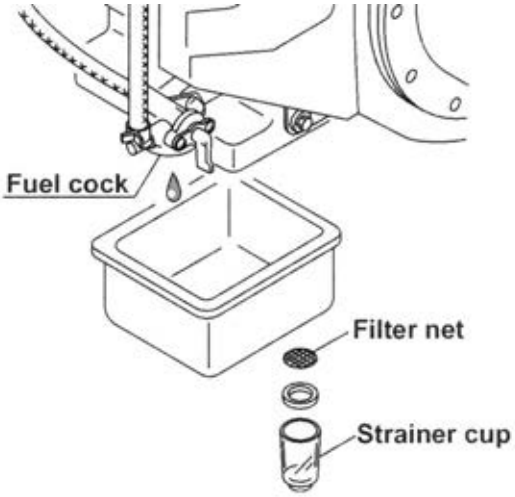

ii. **Check for engine oil level/filling up/changing**

CARCINOGENIC SUBSTANCE. Used engine oil is classified as a carcinogenic substance in the HSE document EH40/XX (where XX is the year**). If in doubt about what precautions are require contact your company health and safety personnel or the local branch of the Health and Safety Executive**

DO NOT allow spilt oil to build up. It is both a fire and slip hazard.

NB

Replace engine oil after the first 25 hours of operation or 1month whichever is the later. It must be changed every 50 hours after that.

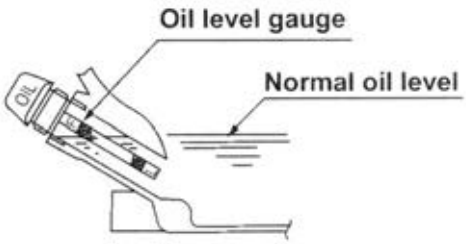

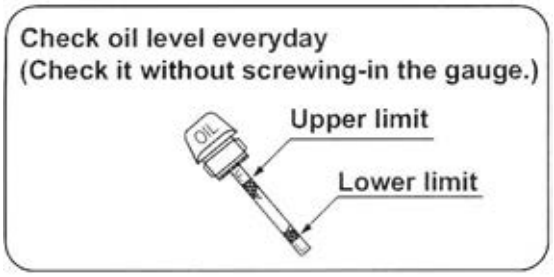

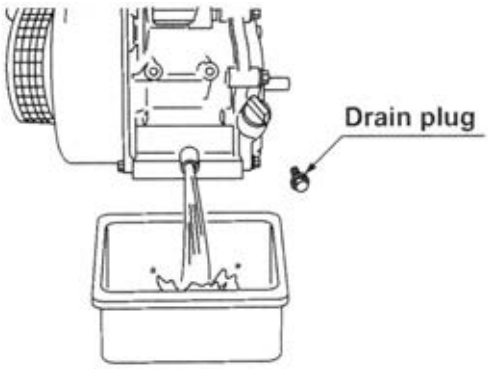

- Check the engine oil level before starting the engine.
- If the engine has previously been started allow at least 5 minutes before checking the level.
- Remove the oil level gauge (dipstick) and wipe it with a **clean** rag or paper towel.
- Re-insert the dipstick and remove it slowly and ensure the oil level is between the limits marked.
- Check the condition of the oil at the same time.
- If the oil level is too low, top it up.
- **DO NOT** overfill. Pour small quantities of oil into the engine and recheck frequently.
- Oil quantity 1.2 litres maximum

iii. Battery electrolyte level

EXTREMLY FLAMMABLE Hydrogen Gas is given off from battery electrolyte solution. This burns hot enough to combust skin on contact and has no flame. DO NOT smoke or bring naked lights close to the battery when topping up or charging – YOU MAY DIE

DO NOT allow the electrolyte to splash on to your body or clothing. Electrolyte contains sulphuric acid which may cause severe burns or blindness. If your clothing is splashed remove at once. If your skin or eyes are splashed wash immediately with copious amounts of water for at least 10 minutes. Seek medical assistance immediately afterwards.

ALWAYS wear rubber gloves, cotton clothing and chemical resistant safety goggles when handling batteries

NB

If the crane is stored for any length of time disconnect the negative (-) battery lead. The battery will require charging using the following regime:

Warm weather:	**Once a month**
Cold weather:	**Once every other month**

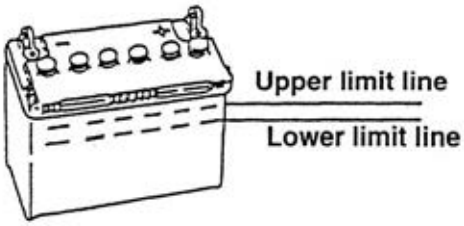

- Check that the battery electrolyte level is between the upper and lower limits with the battery placed on a level surface.
- If the solution is below the lower limit remove the caps and top up with distilled or de-ionised water.
- Tighten the caps securely after topping up.
- **DO NOT** overfill. If the electrolyte is above the upper limit it may leak and corrode the carrier body.

iv. Check hydraulic oil level

DO NOT attempt any work with the hydraulic system when the carrier has been operating. The temperature of the oil and components, including the tank can reach 80˚C

NB

Replace hydraulic oil after first three months of operation, then annually

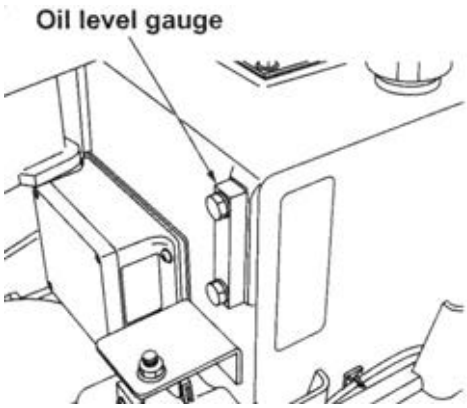

- Ensure the carrier is parked on level ground.
- Check the level of the hydraulic oil on the oil level gauge located in the front of the oil reservoir.

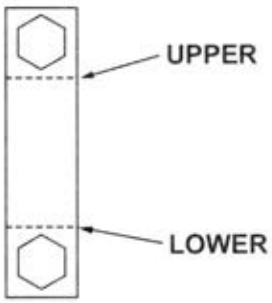

- The proper level is between the 'UPPER' and 'LOWER' limits illustrated left
- If the oil level is below the 'LOWER' limit, remove the cap and top up with specified oil.

v. **Check for track tension**

DO NOT work on tracks with the carrier body raised off the ground on its outriggers

NB

Track tension testing must be carried out with the tracks touching the ground

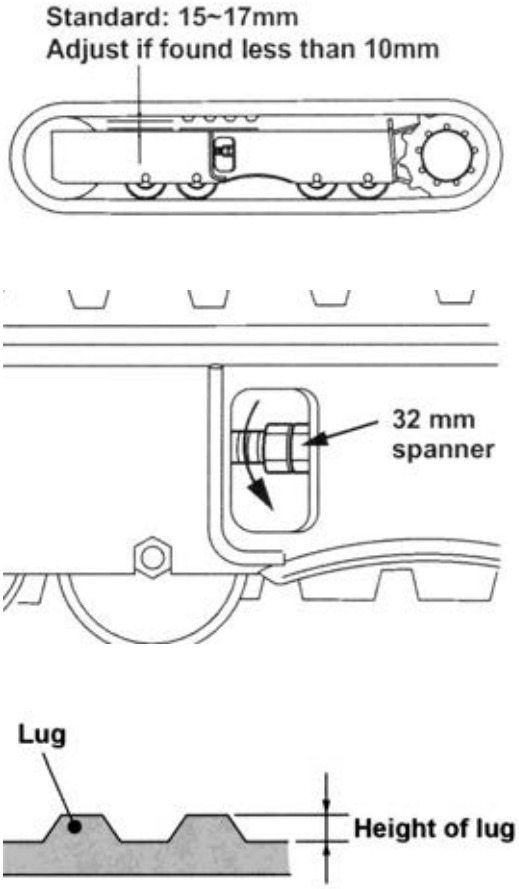

- Check the rubber track for wear and tension regularly as wear varies according to operating and ground conditions.
- Initial check and adjustment after 30 hours of operation and then whenever necessary.
- When tensioning the rubber track, turn the nut in the direction of the arrow and the lock with another nut
- If the tension is too tight it will shorten the life of the sprockets.
- Replace the track when the lug height is below 3mm

NB

Do not crawl over rocks or stones which have sharp edges
Do not change direction when there is a difference in ground level
Do not make quick changes of direction as this may dislodge the track from its wheels
Do not allow oils such as diesel fuel, engine or hydraulic oil to remain on the track, wash them off immediately
Do not operate where there is a high salt content on the ground
For long time storage protect the vehicle from the sun and inclement weather

b. ***<u>250 hour or 3 monthly Inspection</u>***

i. **<u>Checking the air filter element</u>**

DO NOT attempt to clean or replace the air filter when the engine is running

NB

If the crane is operated in abnormally dusty conditions the period of inspection should be reduced

Check the air filter element every 250 hours or 3 months

- Unfasten the clamps to remove the air cleaner cover
- Clean the air filter element

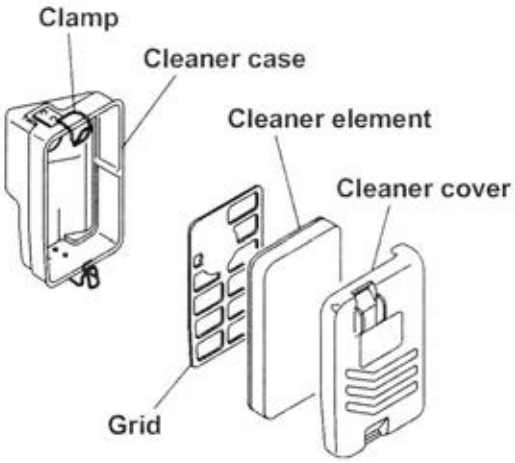

ii. **Check crawler motor reduction gearing oil level**

DO NOT work on the crawler motor for at least 20 minutes after the carrier has finished operating as there is a high temperature hazard with the motor casing and oil

BEWARE there is a high pressure oil hazard inside the reduction gears. Open the filling port plug NO MORE than 2 – 3 turns to release the internal pressure

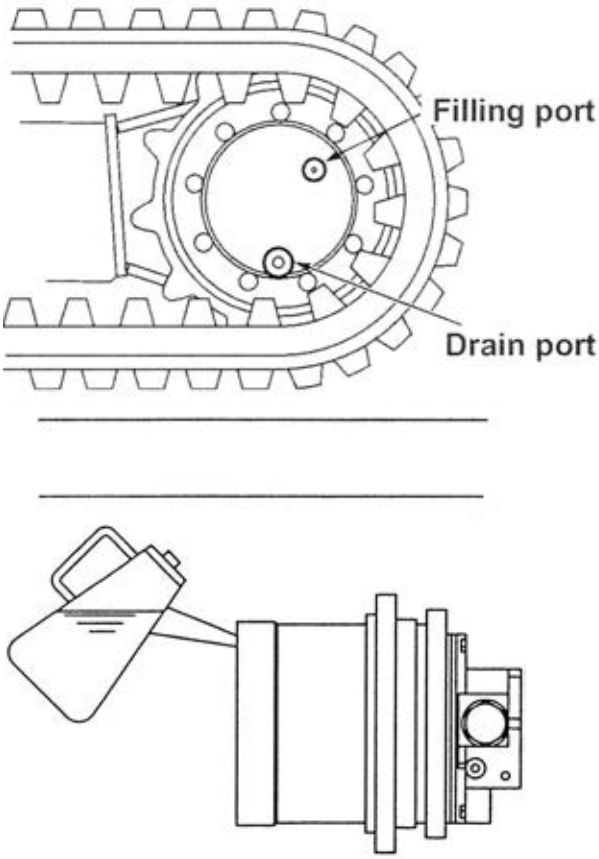

- Park the crane on flat ground
- Position the sprocket so that the 2 plugs are as shown in the illustration and stop the engine
- Unfasten the filling port slowly to release pressure
- Remove the plug for the filling port
- If oil flows from the filling port it is at the correct level
- If not, fill it up until it does
- Check the 'O' ring on the plug and replace with a new one if it is damaged
- Replace and tighten plug

c. ***Storage***

Stop the engine and thoroughly remove dirt and debris stuck on the carrier body. In particular, be sure to remove the debris stuck to the battery, electric wiring and any parts directly affected by heat, such as the silencer as this could cause a fire

Shift each crawling lever to the neutral position to lock it

Avoid storing the crane in direct sunlight

Disconnect the negative (-) side of the battery

Intentionally Blank

13 MAINTENANCE AND INSPECTION OF CRANE

DO NOT carry out any maintenance work until power to the crane and carrier is isolated. A 'MAINTENANCE IN PROGRESS' warning signboard must be hung over the controls in the drivers position prior to any maintenance work being carried out.

NB

All replaceable items must be replaced according to the criteria outlined in this manual. Failure to do so may cause damage to the machine and will invalidate any current warranties.

NB

When parts need replacing (other than running spares) or anything abnormal is found contact your local UNIC dealer for, inspection, replacement or advice.

a. Pre-use inspection

Device	Servicing Item
Hydraulic Pump	Tightness of each mounting, oil leakage, unusual noise
Hydraulic Oil Tank	Oil level, oil leaks
Outriggers	Normal function, deformation, oil leakage, cracks
Winch	Function, function of brake, irregular winding
Slewing	Correct function, oil leakage
Boom Derricking	Correct function, oil leakage, mounting of foot pin
Boom Telescoping	Correct function, oil leakage, deformation, cracks, mounting of fixing pin

Device	Servicing Item
Hook	Block rotation, function of hook retaining mechanism
Wire Rope	Damage, condition of rope end fixing
Overwind Alarm	Correct function, voice warning system function
Interlock for Crane-Crawl	Crane will not function when set to "crawl" position. Carrier will not travel when set to "crane" position.
Load Meter **094/095 only**	Oil leaks Function
Signal Horn	Correct function
Hydraulic Pipes	Oil leakage, damage

Device	Servicing Item
Frame	Mounting of crane body, cracks, tightness of bolts, missing bolts
Lifting Accessories	Items necessary for lifting operation are provided
Automatic Hook Storage	Correct function of automatic stop and storing operations
Automatic Stop for Leaving Minimum Wire Rope	Unwinding stops when only 3 turns of rope are left on the winch drum
Safe Load Indicator **295 only**	Refer to Chapter 18 for information on the Safe Load indicator

b. ***Cleaning***

When washing with high-pressure water take particular care not to let water get into the electrical system. This may well cause the crane or carrier to malfunction creating a hazard

Keep the crane clean at all times

Sand and dust will cause accelerated wear on carrier and crane parts, ensure the vehicle is particularly well after operating in these environments

c. ***Inspection of slew bearing mounting bolts***

ENSURE the outer ring mounting bolts are checked for correct torque every 6 months. Breakage of the bolts could lead to collapse of the boom

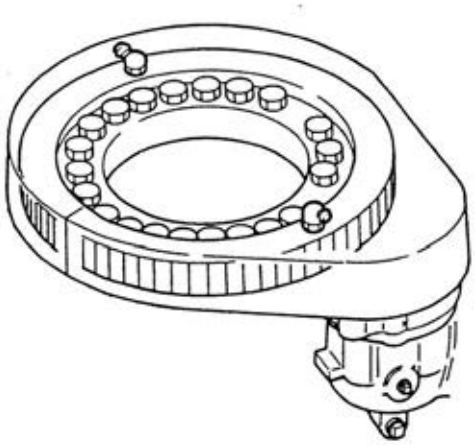

If the slew ring makes an unusual noise when operating or crawling, or excessive movement is observed when operating the crane, or if a gap is observed on the mounting surface, contact your UNIC service agent immediately for inspection and/or repair

d. ***Inspection of wire rope***

Wire rope is an expendable item. It may be damaged in many ways leading to a reduction in its safety factor. Replace the rope according to the following criteria.

NB

This section must be read in conjunction with BS 7121-2:2003

Wear leather gloves when replacing the wire rope

i. **Replacement criteria**

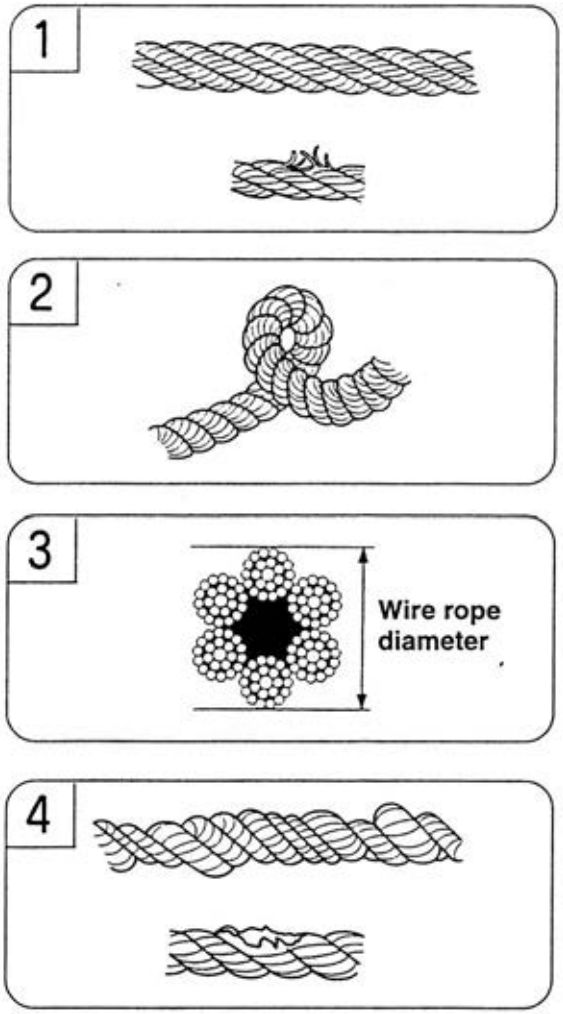

1. A rope in which the amount of broken wire strands (except filler wires) is more than 10%, within the pitch of the twist.

2. When a rope is kinked. It may be a twisted kink as illustrated, or a flat kink

3. A rope whose diameter has decreased by more 7% of the nominal diameter. For example: where a rope of 8mm nominal diameter is used, replace it when any part of the rope is 7.5mm

4. A rope that has become deformed or excessively corroded

ii. Replacing the rope

a. 094

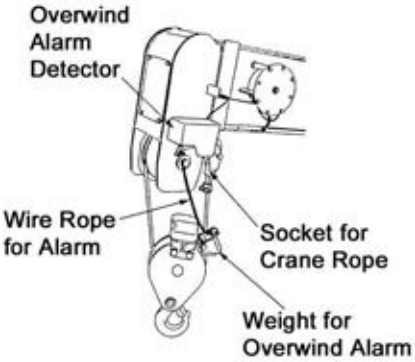

- Refer to the figure on the left for crane rope routing and location of the weight for the overwind alarm

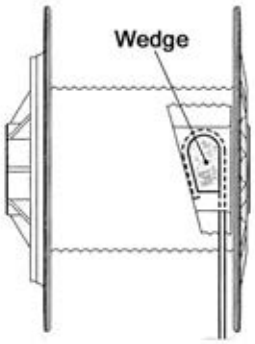

- Refer to the figure on the left for correct wedge attachment to the drum

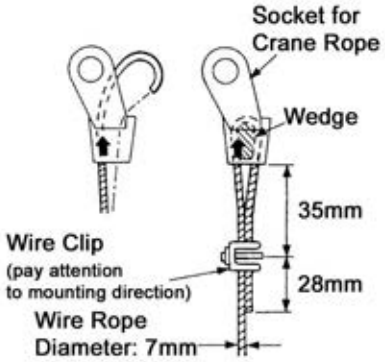

- When passing the crane rope through the wire socket, ensure it is passed as indicated by the arrow on the socket
- If it is passed the other way the rope will be permanently bent, shortening the life of the rope
- Always mount the wedge and wire clip as illustrated left

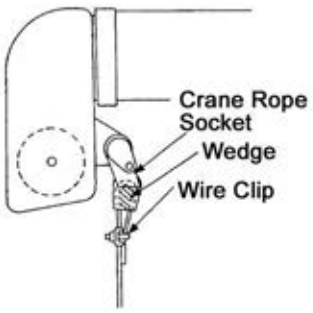

- The arrow on the wire socket must face outward, as shown, when mounted on the boom

b. 095/295

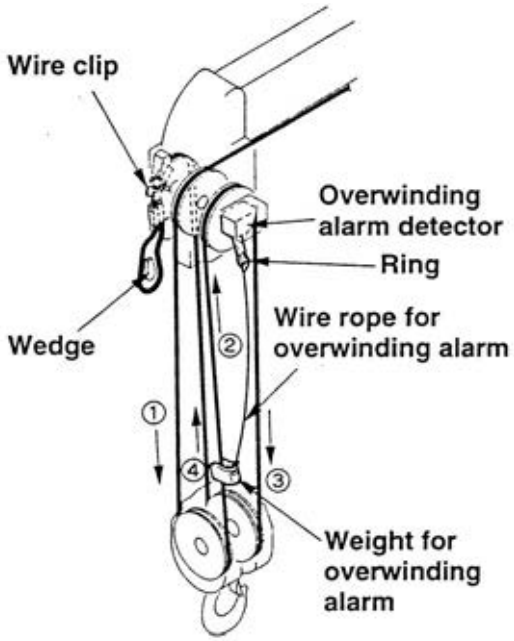

- Refer to the figure on the left to follow the routing of the rope and where the weight for the overwind alarm is to be mounted

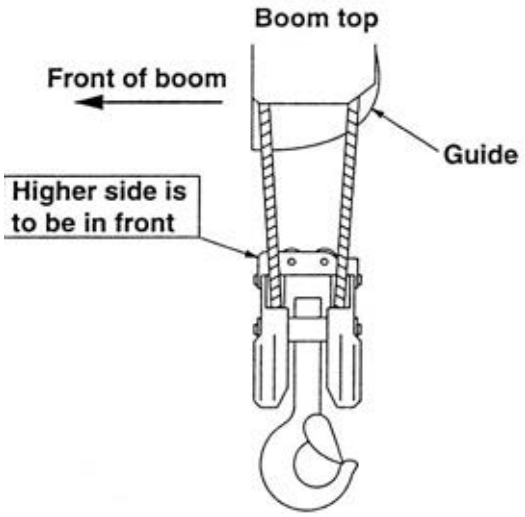

- Refer to the figure on the left for the correct way to attach the hook block

NB

- **Failure to follow this will stop the hook block from auto stowing**

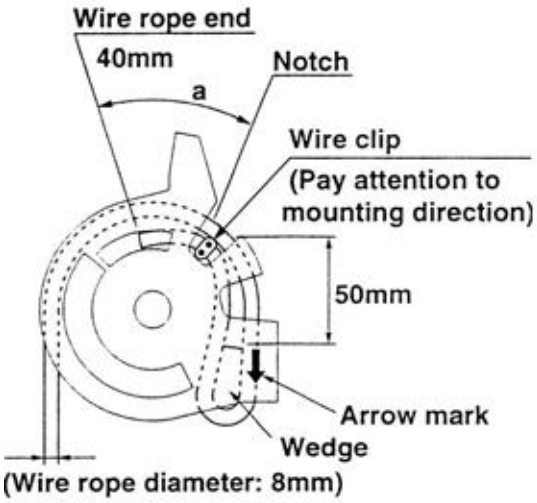

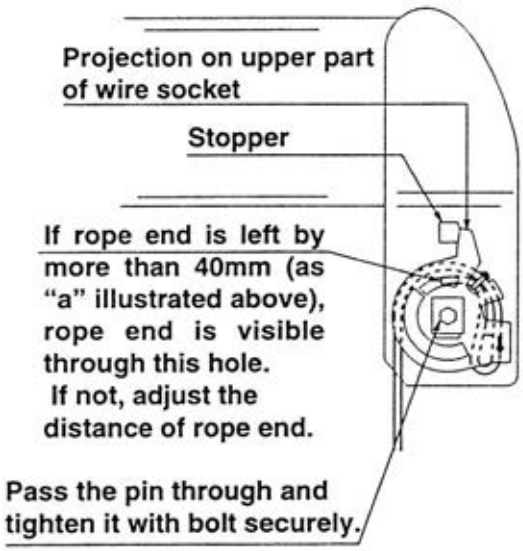

095/295 How to fix the wire rope ends

- Remove the bolt holding the wire socket on the end of the boom
- Remove the wire clip, knock out the wedge and remove the old rope
- Remove the old rope from the winch drum
- Refit the new rope to the winch drum
- Feed the rope through the guides on the boom and route it through the hook block as shown previously
- When passing the new wire rope end through the socket, be sure to pass it as indicated by the arrow mark on the socket
- If it is passed the other way the rope will be permanently bent, shortening the life of the rope
- Always mount the wedge and wire clip as illustrated left
- Ensure there is more than 40mm between the notch and the wire end as shown at 'a'
- Re-position the wire socket in the boom end and tighten securely

iii How to correct twisted ropes

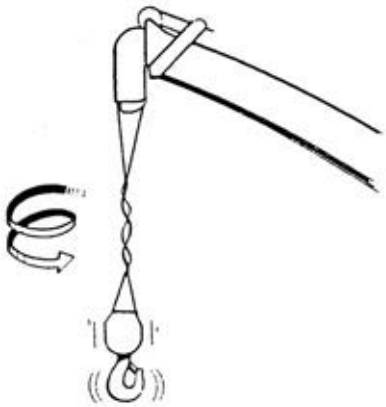

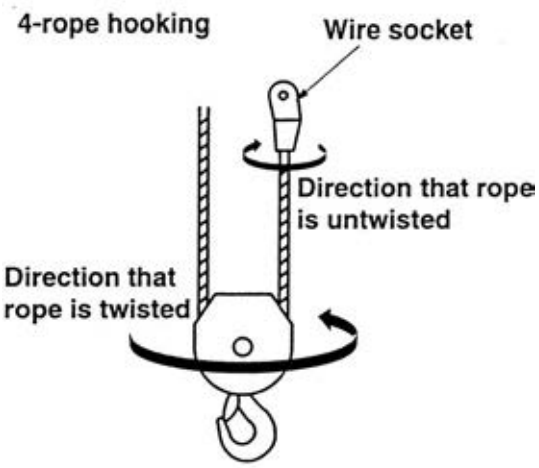

(Note) Rotate wire socket to the direction opposite to wire ropes have been twisted.

Wire ropes tend to turn in their 'untwisting' direction when under tension

When fitting a new rope the twist should be taken out when fitting the rope to the drum

If wire ropes are twisted, correct them as follows:

- Unload the hook
- Extend the boom fully
- Raise the boom to an approximate angle of 65°
- Unwind the hook until it is almost on the ground
- Check how many twists are in the rope
- Wind up the hook and stow the boom
- Remove the wire socket and turn it in the 'untwisting' direction the number of twists multiplied by the number of falls. That means the socket must be untwisted a minimum of 4 turns with a 4-fall hook
- Re-attach the wire socket, extend boom fully and raise to an angle of 65°.
- Wind the rope up and down to its extremes 3 times. Check for twists
- If it remains twisted repeat the above procedures

iv. Replacement of expendable parts

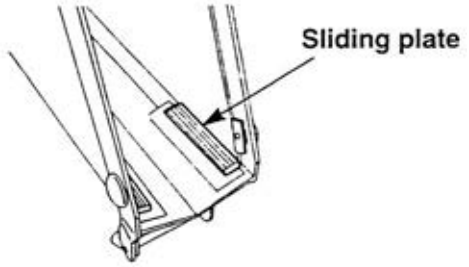

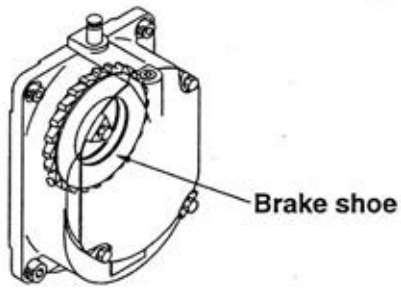

- Although timing of replacement parts varies according to how frequently the crane is used and environmental conditions, replace hydraulic cylinder gaskets and seals every 3 calendar years (this includes the periods the crane is not in use).
- Replace the sliding plates in the boom every 3 calendar years
- Replace the brake shoe in the winch drum every 3 calendar years

14. CARRIER LUBRICATION

DO NOT SMOKE, EAT OR DRINK when handling hydraulic oil, grease or fuel

DO NOT attempt any work with the hydraulic system when the carrier has been operating. The temperature of the oil and components, including the tank can reach 80˚C

WIPE UP any spills as these cause a fire and slip hazard

ALWAYS wear the appropriate Personal Protective Equipment. Hydraulic oil (both new and used) is a known primary vector in the causation of occupational dermatitis

a. Precautions when carrying out lubrication

Lubricate in accordance with the Lubrication Charts and bear the following points in mind

- Cleaning filling ports and grease nipples thoroughly before carrying out any replenishment
- Always use new lubricant and prevent the entry of dust and debris
- When replenishing grease, inject it until old grease is forced out

b. Recommended lubricants

Use engine oil as shown below:

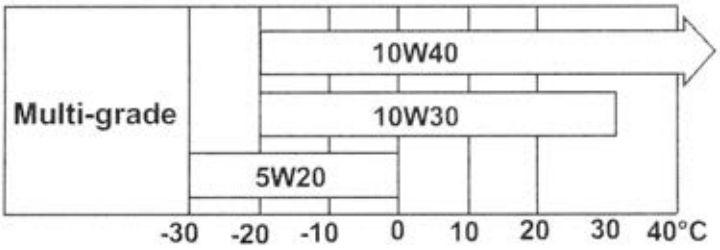

The selection of the correct engine oil is vital to the engine. Choosing the wrong oil or neglecting an oil change can result in severe damage to the engine.

Recommended hydraulic oil is the same as that used in the crane.

Recommended gear oil for crawler motor reduction gearbox

Petroleum Maker	Brand
SHELL	DONAX TT or TD
CALTEX	RPM TRACTOR HYDRAULIC FLUID
CHEVRON	TRACTOR HYDRAULIC FLUID
TEXACO	TDH
MOBIL	MOBILAND SUPER UNIVERSAL

c. ***Carrier lubrication chart***

i. 094

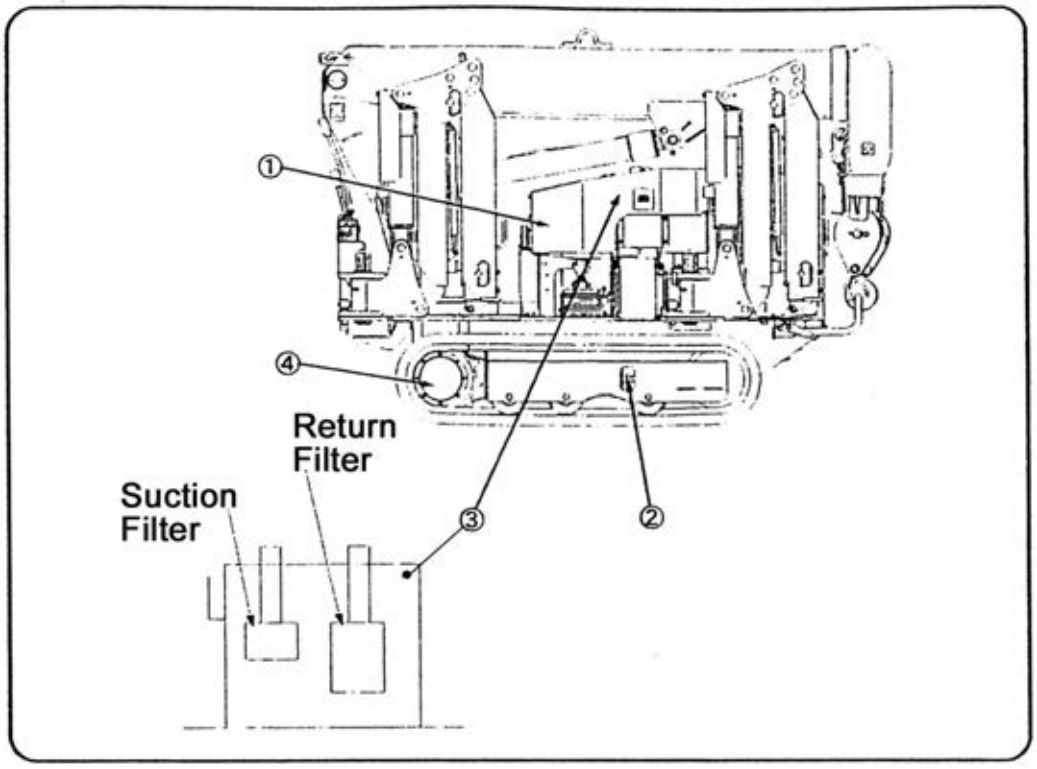

ii. 095/295

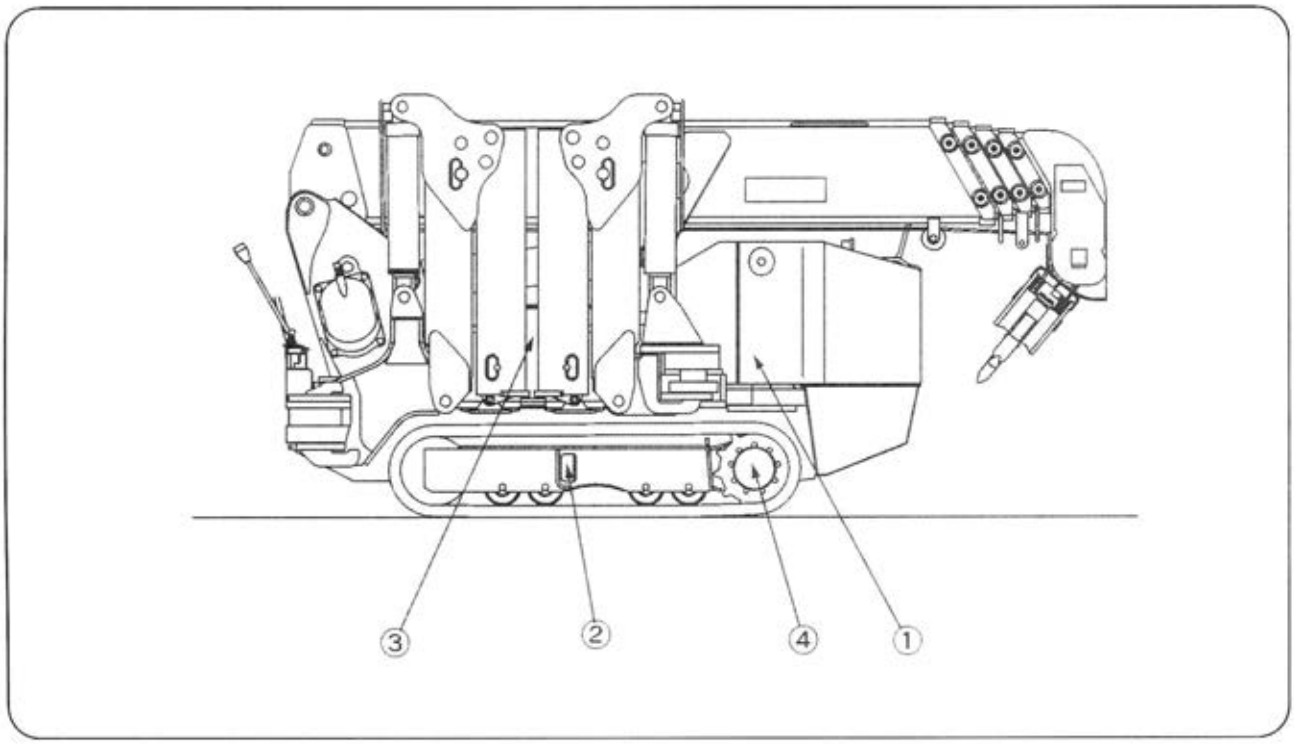

Service Interval	Where to Lubricate	Number of Parts	Lubricant	Tool
Initial: Replace every 25 hours After: Replace every 50 hours	① Engine 1,2 Litres	1	Engine oil	
Initial: 30 hours, then whenever necessary	② Tension adjustment of track	2		32mm Spanner
Initial: Replace after 3 months After: Replace every year	③ Hydraulic oil tank (17 Litres) 094 (27 Litres) 095/295	1	Hydraulic oil	
Replace every 1000 hours	④ Crawling gear reduction gear oil (0,33 Litres)	2 Right/Left	Diesel engine oil	

Fuel	Petrol
Tank Capacity	6 Litres

15 CRANE LUBRICATION

DO NOT SMOKE, EAT OR DRINK when handling hydraulic oil, grease or fuel

ALWAYS wear the appropriate Personal Protective Equipment. Hydraulic oil (both new and used) is a known primary vector in the causation of occupational dermatitis

DO NOT attempt any work with the hydraulic system when the carrier has been operating. The temperature of the oil and components, including the tank can reach 80˚C

DO NOT uncap any filling or draining ports when the oil is still hot. The pressure of any fluid increases when heated. There is a definite risk of scalding hot oil being ejected under pressure. This would not only scald the skin but could be injected under the skin causing severe injury or death.

WIPE UP any spills as these cause a fire and slip hazard

NB

Keep filling ports and grease nipples clean. Clean thoroughly before carrying out lubrication. Always use new lubricants. When forcing grease into each nipple, ensure you continue to inject until the old grease is ejected.

a. List of recommended lubricant

Only use industrial hydraulic oils
ISO VG 46 is for temperatures over 0°C
ISO VG 22 is for temperatures under 0°C

Recommended hydraulic oil
The recommended hydraulic oil is the same for the crane

Maker	Brand	
	ISO VG 22	ISO VG 46
SHELL	Shell Tellus Oil 22	Shell Tellus Oil 46
CALTEX	Spindura Oil 22	Rando Oil 46
ESSO	Spinesso 22	Teresso 46
MOBIL	Mobil DTE 22	Mobil DTE Medium Oil

Recommended Gear Oil
Use API Service GL-4 type Gear Oil

Maker	Brand
SHELL	Shell Spirax EP 90
CALTEX	Universal Thuban SEA 90
ESSO	Standard Gear Oil 90
MOBIL	Molylube GX 90

Recommended Grease
a. Chassis Grease:
NLGI No.2 grade for normal temperatures
NLGI No.1 grade for extremely low temperatures

b. Molybdenum Grease:
Use NLGI No.2 grade

Maker	Brand
SHELL	Retinax AM
CALTEX	Molytex Grease EP2
ESSO	Beacon G2
MOBIL	Mobyplex Special

b. Crane lubrication chart

i. 094

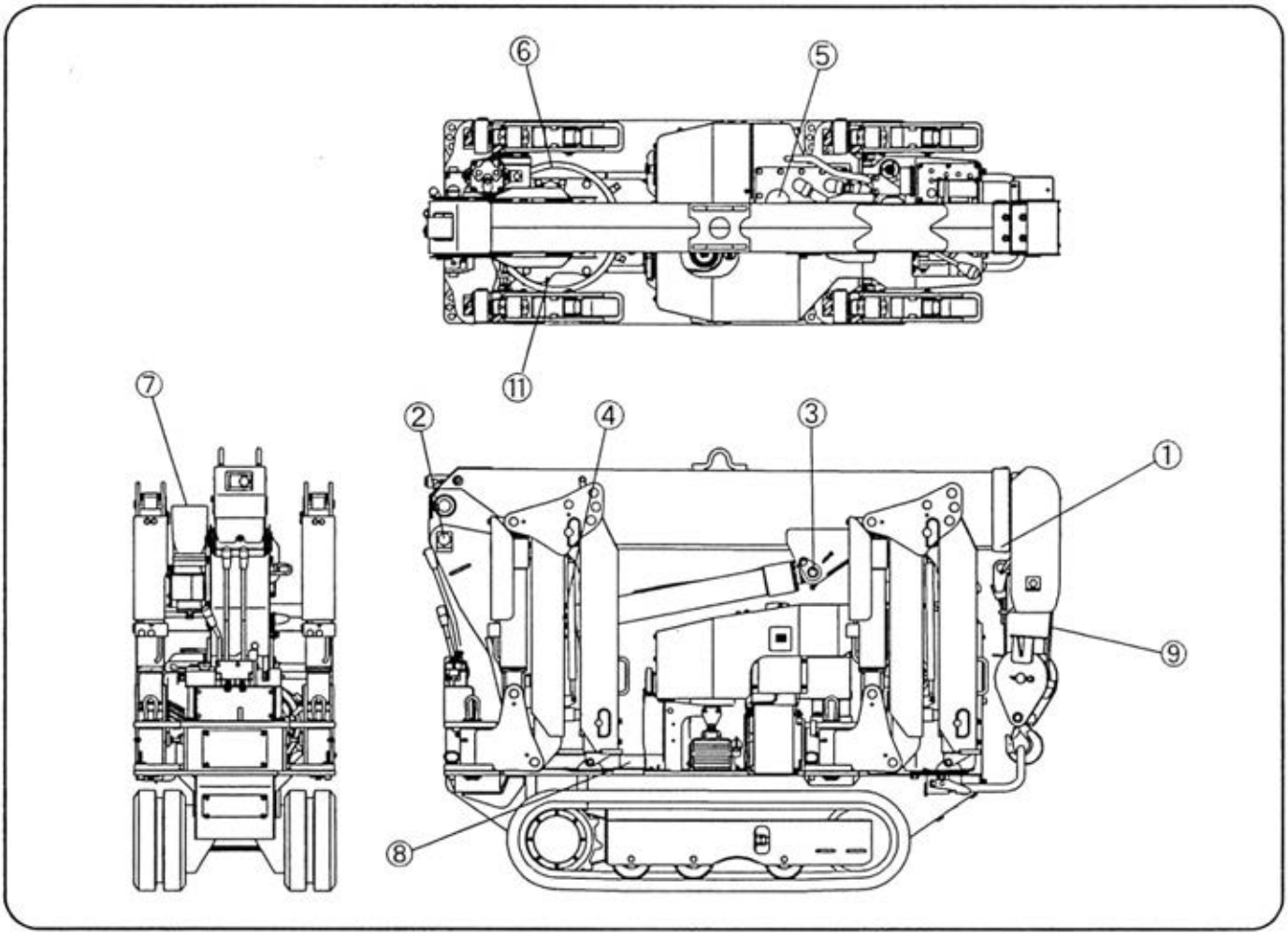

Service Interval	Where to Lubricate	No of Parts	Lubricant	Tool
Daily	**1** boom side plate (Underside & side face of boom sections②③④) **2** Boom foot pin **3** Upper support pin of derricking cylinder **4** Lower support pin of derricking cylinder	4 1 1 1	Molybdenum Grease Chassis Grease Chassis Grease Chassis Grease	Manual Grease Pump Grease Pump Grease Pump
Weekly	**5** Winch drum gears **6** Slewing gears	1 1	Chassis Grease Chassis Grease	Grease Pump Manual
Monthly	**7** Winch reduction gears (approx. 1,0 Litre) **8** Slew reduction gears (approx. 0,3 Litre) **9** Wire rope **10** Slew bearings **11** Outrigger fulcrum pin	1 1 1 2 4	Gear Oil Gear Oil Rope Grease Chassis Grease Chassis Grease	 Spray Gun Grease Pump Grease Pump

ii. 095/295

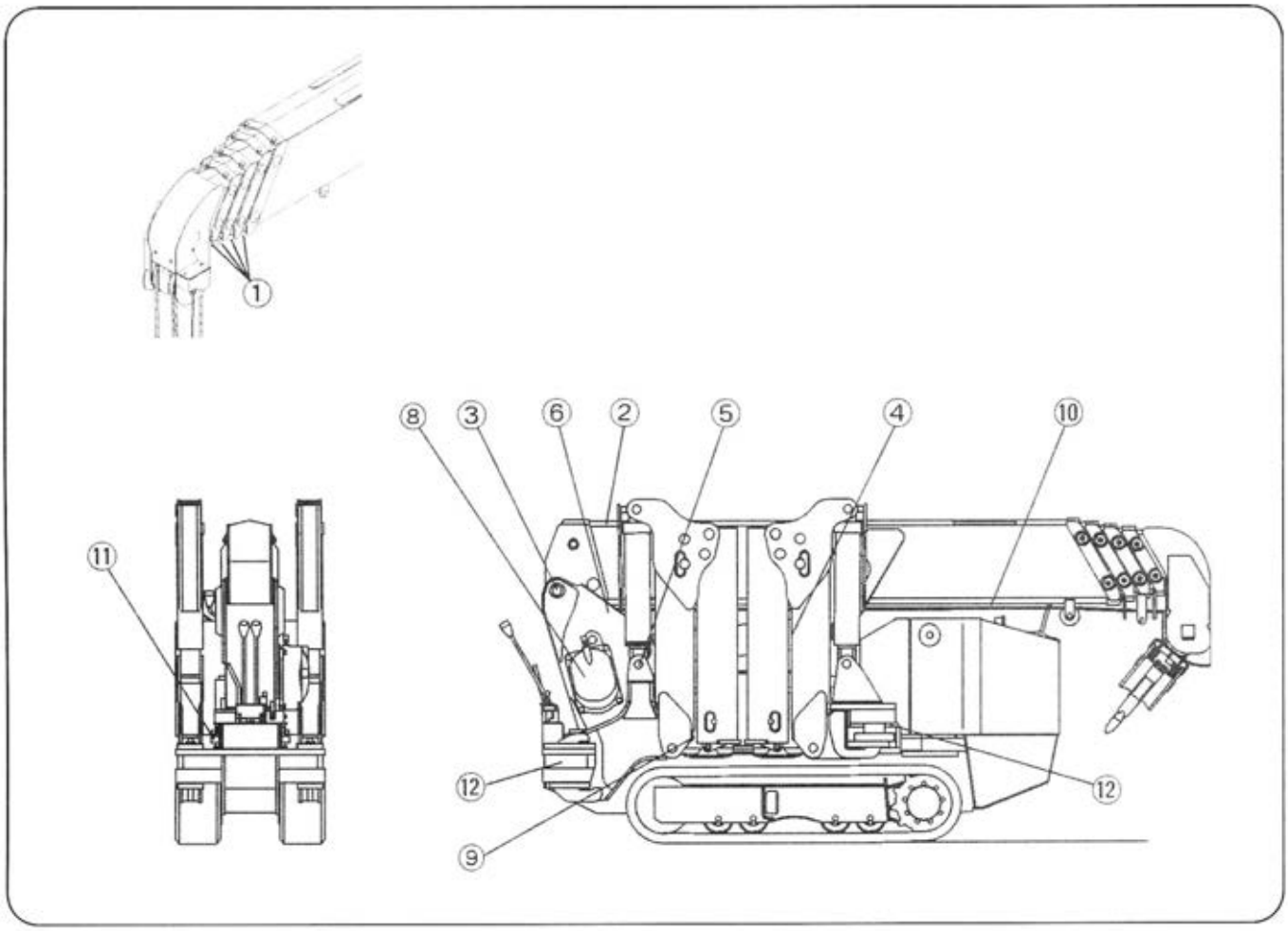

Service Interval	Where to Lubricate	No of Parts	Lubricant	Tool
Daily	**1** boom side plate (Underside & side face of boom sections ②③④⑤) for 5 section booms **2** Boom side plate (Upper side of boom section ①) **3** Boom foot pin **4** Upper support pin of derricking cylinder **5** Lower support pin of derricking cylinder	4 4 1 1 1	Molybdenum Grease Molybdenum Grease Chassis Grease Chassis Grease Chassis Grease	Manual Manual Grease Pump Grease Pump Grease Pump
Weekly	**6** Winch drum gears **7** Slewing gears	1 1	Chassis Grease Chassis Grease	Grease Pump Manual
Monthly	**8** Winch reduction gears (approx. 1,0 Litre) **9** Slew reduction gears (approx. 0,3 Litre) **10** Wire rope **11** Slew bearings **12** Outrigger fulcrum pin	1 1 1 2 4	Gear Oil Gear Oil Rope Grease Chassis Grease Chassis Grease	 Spray Gun Grease Pump Grease Pump

c. *Lubrication of reduction gears, slew gears and wire rope*

i. Replacement of gear oil (winch and slew reduction gears)

094 Winch reduction gear

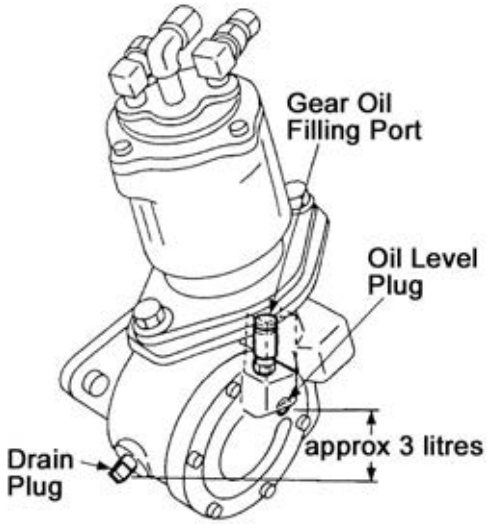

As air can enter the gearbox casings it may bring dust and debris with it

In addition moving machinery creates its own debris as it operates, no matter how well lubricated

Therefore replace oil in both gearboxes 6 months or 250 hours after bringing the vehicle into operation

Thereafter replace the gear oil

- Once every 12 months (1000 hours) for winch reduction gears
- Once every 24 month (2000 hours) for slew reduction gears

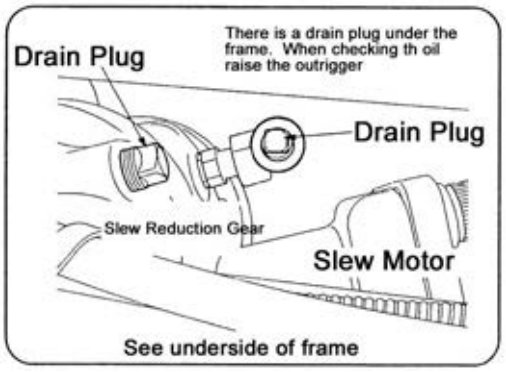

094 Slew Reduction Gear

095/295 Winch Reduction Gear

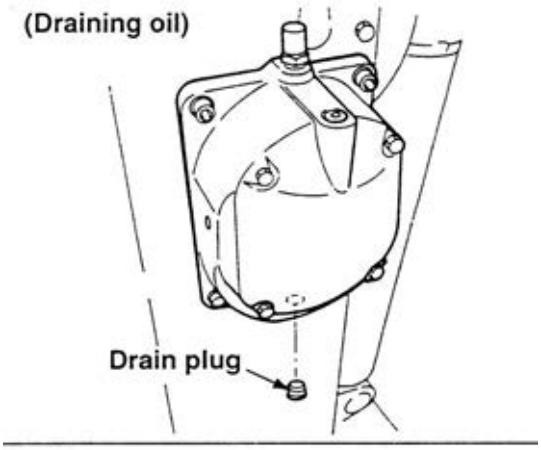

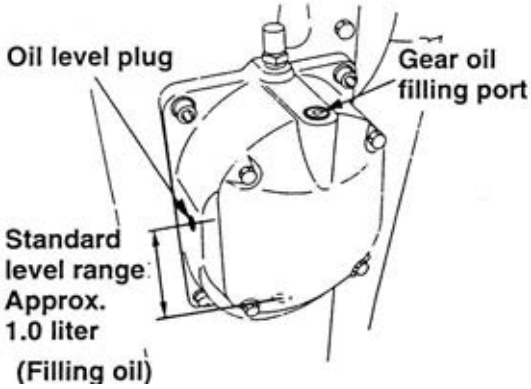

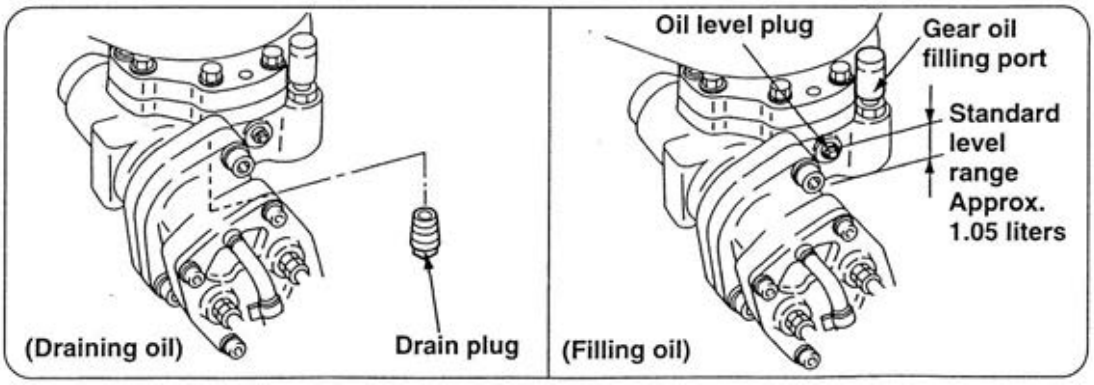

095/295 Slew Reduction Gear

ii. Lubrication of slew bearings

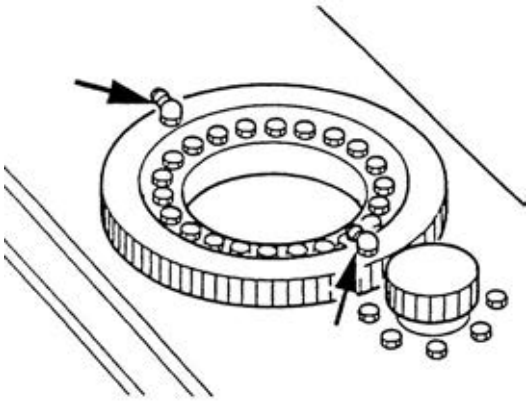

The slew ring employs a ball race as its bearing surface

Grease the bearings once a month during moderate operation and once a week during heavy operation

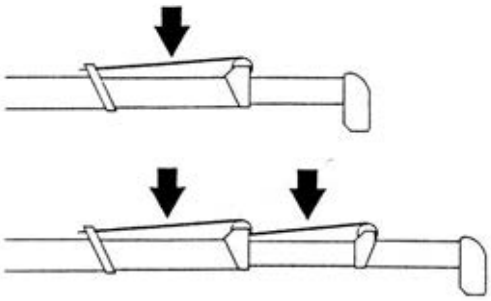

Apply grease to the boom extension ropes once a month, ensuring the boom is fully extended

Intentionally Blank

16. SPECIFICATION

a. 094 SPECIFICATION

TECH SPEC		
Crane capacity	capacity:	0,995t x 1,5m
Max working radius	max:	5,17m
Max lifting height	approx:	5,6m
Dimensions	folded:	1870mm (l) x 595mm (w) x 1290mm (h)
Weight	unladen:	1000kg (1100kg with electric option)
Point loadings	Point loading information available elswhere in Chapter 16	
Hook speed	approx:	8,5m/min with 3 layers and 2 falls
Telescopic system	boomlength: telescoping speed: boom type:	1,73 ~ 5,49m 3,76m/16 seconds 4 section hydraulically telescoping boom, 4 sided box beam construction
Derricking angle/speed	approx:	0-78°/5,5 seconds
Slewing angle/speed	approx:	360° (continuous) 1.5 min^{-1} (rpm)
Traction system	drive: travel speed: gradeability: track ground length: track ground pressure: track width:	hydrostatic stepless forward and reverse 0 ~ 2,2km/h 20° 900mm 36,3kPa (0,37kg/cm^2) 150mm
Engine **Mitsubishi**	fuel: maximum output: starting method: tank capacities:	petrol (electric and LPG options) 5,5kW (7,5PS)/1800^{-1} (rpm) electric and recoil start as standard 6 litres
Standard equipment	standard equipment:	Overwinding alarm, intelligent voice warning system, radio remote control
Optional equipment	optional equipment:	1 fall block, electric and LPG conversions, low marking tracks

b. 094 OUTRIGGER PLANS AND WORKING RANGE CHART

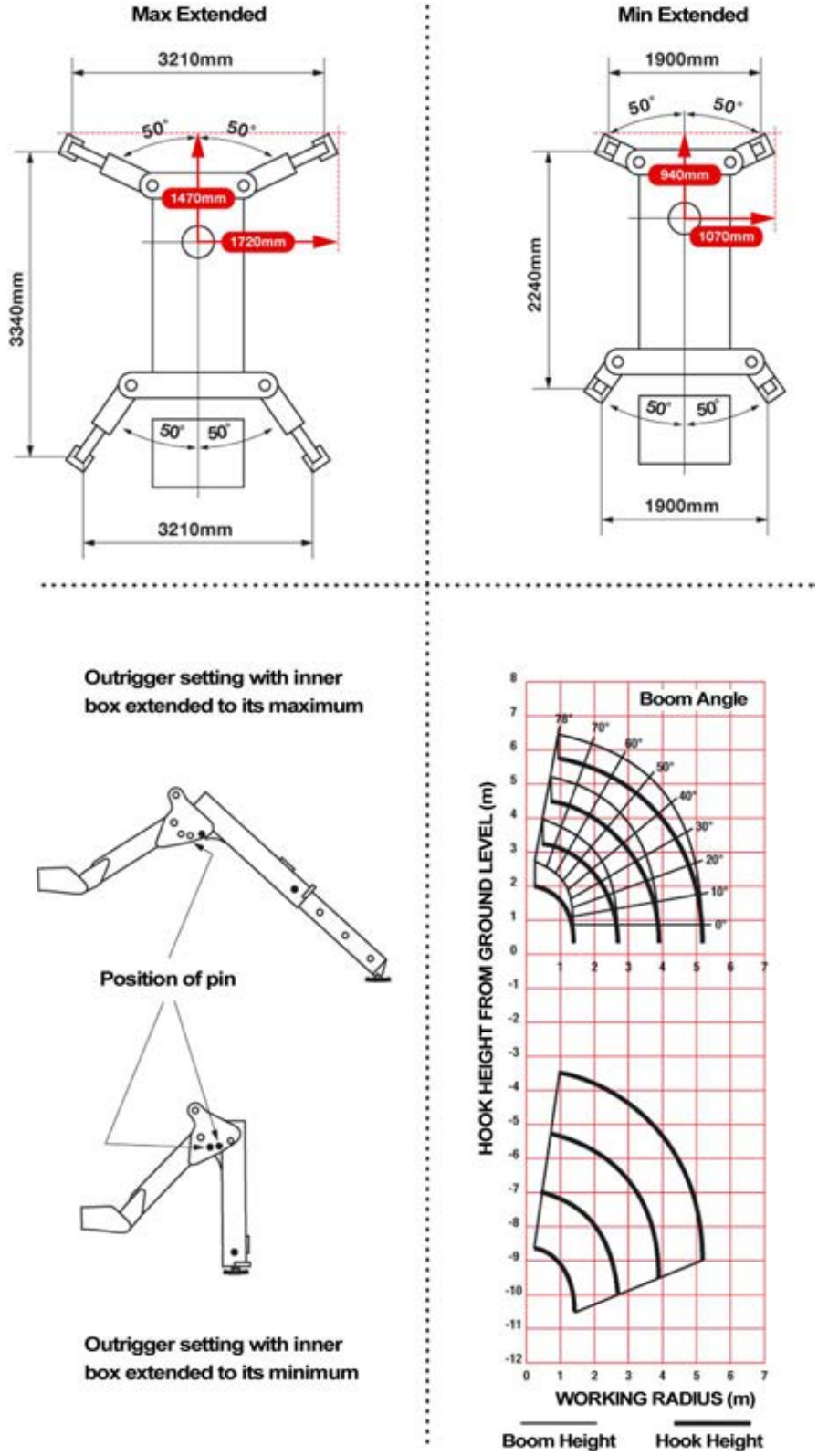

Note: The above figures are based on no-load condition and do not include the deflection of the boom.

c. ***URW 094C RATED LOAD CHART***

Boom-sections extended: 1

Working radius (m)		1,0	1,1	1,2	1,3	1,41
Rated load (t)	Outriggers extended to maximum	0,995	0,995	0,995	0,995	0,995
	Outriggers extended not to maximum	0,8	0,8	0,75	0,7	0,65

Boom-sections extended: 1+2

Working radius (m)		1,0	1,1	1,3	1,5	2,0	2,5	2,69
Rated load (t)	Outriggers extended to maximum	0,995	0,995	0,995	0,995	0,8	0,65	0,58
	Outriggers extended not to maximum	0,8	0,8	0,7	0,6	0,41	0,285	0,23

Boom-sections extended: 1+2+3

Working radius (m)		1,0	1,8	2,0	2,5	2,8	3,0	3,5	3,93
Rated load (t)	Outriggers extended to maximum	0,85	0,85	0,8	0,65	0,58	0,53	0,4	0,32
	Outriggers extended not to maximum	0,5	0,5	0,41	0,285	0,215	0,19	0,145	0,115

Boom-sections extended: 1+2+3+4

Working radius (m)		2,4	2,5	2,8	3,0	3,5	4,0	4,5	5,1	5,17
Rated load (t)	Outriggers extended to maximum	0,66	0,66	0,58	0,53	0,41	0,33	0,27	0,21	0,2
	Outriggers extended not to maximum	0,36	0,32	0,22	0,19	0,145	0,105	0,08	0,065	0,065

d. URW 095/295 SPECIFICATION

TECH SPEC		
Crane capacity	capacity:	URW095C 0,995t x 3,5m URW295C 2,9t x 1,4m
Max working radius	max:	8,41m
Max lifting height	approx:	8,8m
Dimensions	folded:	2750mm (l) x 600mm (w) x 1380mm (h)
Weight	unladen:	URW 095/295CR 1850kg URW 095/295CR(E) 1950kg
Point loadings	Point loading information available elswhere in Chapter 16	
Hook speed	approx:	10m/min with 4 layers and 4 falls
Telescopic system	boomlength: telescoping speed: boom type:	2,53 ~ 8,65m 6,12m/20 seconds 5 section hydraulically telescoping boom, hexagonal box construction
Derricking angle/speed	approx:	0-78°/11 seconds
Slewing angle/speed	approx:	360° (continuous) 1.5 min^{-1} (rpm)
Traction system	drive: travel speed: gradeability: track ground length: track ground pressure: track width:	hydrostatic stepless forward and reverse 0 ~ 2,3km/h 20° 1050mm 48kPa (0,49kg/cm^2) 180mm
Engine	fuel: maximum output: starting method: tank capacities:	petrol (electric and LPG options) 9,6kW (13PS)/2500^{-1} (rpm) electric and recoil start as standard 6 litres
Standard equipment	standard equipment:	(095) overload warning device , (295) computer controlled rated capacity indicator, (All) intelligent voice warning system, cable remote control (9m)
Optional equipment	optional equipment:	2 fall block, 1 fall block, electric and LPG conversions

e. *095/295 OUTRIGGER PLANS AND WORKING RANGE CHART*

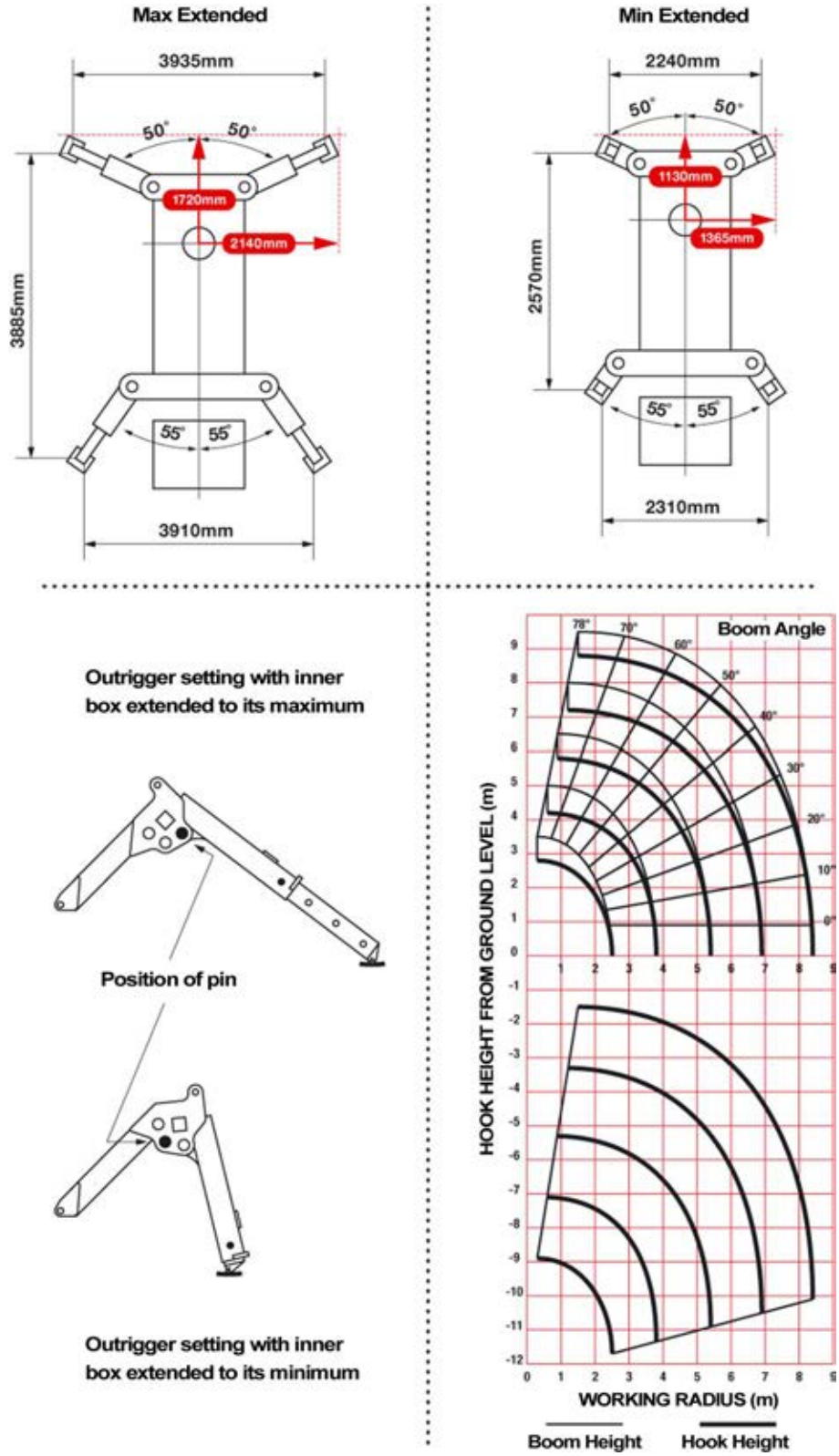

Note: The above figures are based on no-load condition and do not include the deflection of the boom.

f. URW 095C RATED LOAD CHART

Boom-sections extended: 1 & 1+2

Working radius (m)		1.0	1.4	1.5	1.8	2.0	2.5	3.0	3.5	3.835
Rated load (t)	Outriggers extended to maximum	0.995	0.995	0.995	0.995	0.995	0.995	0.995	0.995	0.9
	Outriggers extended not to maximum	0.995	0.995	0.995	0.995	0.995	0.65	0.49	0.35	0.25

Boom-sections extended: 1+2+3

Working radius (m)		2.2	2.5	2.9	3.0	3.5	4.0	4.5	5.0	5.37
Rated load (t)	Outriggers extended to maximum	0.995	0.995	0.995	0.995	0.995	0.8	0.65	0.52	0.43
	Outriggers extended not to maximum	0.8	0.65	0.53	0.5	0.38	0.28	0.22	0.16	0.12

Boom-sections extended: 1+2+3+4

Working radius (m)		3.4	3.8	4.0	4.5	5.0	5.5	6.0	6.5	6.89
Rated load (t)	Outriggers extended to maximum	0.85	0.85	0.75	0.6	0.5	0.42	0.36	0.32	0.27
	Outriggers extended not to maximum	0.42	0.34	0.3	0.25	0.19	0.14	0.1	0.08	0.06

Boom-sections extended: 1+2+3+4+5

Working radius (m)		3.8	4.1	4.5	5.0	5.5	6.0	6.5	7.0	8.0	8.41
Rated load (t)	Outriggers extended to maximum	0.55	0.55	0.45	0.37	0.31	0.27	0.23	0.2	0.15	0.13
	Outriggers extended not to maximum	0.35	0.29	0.25	0.2	0.16	0.13	0.1	0.07	0.04	0.03

g. URW 295C RATED LOAD CHART

Boom-sections extended: 1 & 1+2

Working radius (m)		1.0	1.4	1.5	1.8	2.0	2.5	3.0	3.5	3.835
Rated load (t)	Outriggers extended to maximum	2.9	2.9	2.65	2.25	2.05	1.65	1.3	1.0	0.9
	Outriggers extended not to maximum	2.0	2.0	2.0	1.45	1.1	0.65	0.49	0.35	0.25

Boom-sections extended: 1+2+3

Working radius (m)		2.2	2.5	2.9	3.0	3.5	4.0	4.5	5.0	5.37
Rated load (t)	Outriggers extended to maximum	1.35	1.35	1.35	1.25	1.0	0.8	0.65	0.52	0.43
	Outriggers extended not to maximum	0.8	0.65	0.53	0.5	0.38	0.28	0.22	0.16	0.12

Boom-sections extended: 1+2+3+4

Working radius (m)		3.4	3.8	4.0	4.5	5.0	5.5	6.0	6.5	6.89
Rated load (t)	Outriggers extended to maximum	0.85	0.85	0.75	0.6	0.5	0.42	0.36	0.32	0.27
	Outriggers extended not to maximum	0.42	0.34	0.3	0.25	0.19	0.14	0.1	0.08	0.06

Boom-sections extended: 1+2+3+4+5

Working radius (m)		3.8	4.1	4.5	5.0	5.5	6.0	6.5	7.0	8.0	8.41
Rated load (t)	Outriggers extended to maximum	0.55	0.55	0.45	0.37	0.31	0.27	0.23	0.2	0.15	0.13
	Outriggers extended not to maximum	0.35	0.29	0.25	0.2	0.16	0.13	0.1	0.07	0.04	0.03

h. CRANES WITH ELECTRIC PACK OPTION

Electrical Data

Detail	URW095C/URW295C
Power Output	**3,7kW**
Volts	**AC400 ± 5%**
Frequency	**50/60Hz ± 5%**
Phase	**3**
Cable size	**1,25mm^2**
Earth (very important)	**1,25mm^2**
Motor direction seen from motor shaft	**left**

a. Before Operation

NEVER open the Regulation Box when mains power is applied to the crane

1. The engine must be stopped and the starter key turned to OFF.

2. Press the (Green) ON button on the Regulation Box.

3. If the motor does not start, check the circuit breakers in the Regulation Box. In the case of reverse rotation: 2 of the side wires in the 3 phase plug must be swapped by a competent electrician.

Regulation Box

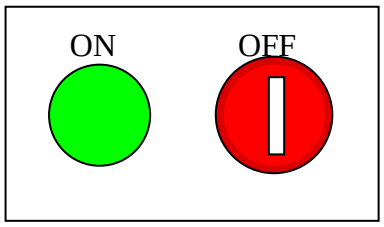

4. When the OFF button is pressed it can only be released by unlocking it with the key provided. This is to stop unauthorised use of the crane.

5. Confirm that the hydraulic system is working by lowering and raising the hook.

6. Confirm that the 12V DC for the Remote Control is available by checking that the Remote Control is working.

b. ***<u>During Operation</u>***

1. When the crane is operating under electrical power, it is very quiet. The operator must ensure that all personnel in the area are made aware that the crane is working. He must remain observant throughout the operation.

2. The crane speed will be fixed when using the Electric Pack due to the constant speed of the output shaft.

3. When the crane is not working, turn OFF at the Regulation Box.

c. ***<u>After Operation</u>***

1. Turn the electric motor off.

2. Remove the mains supply cable.

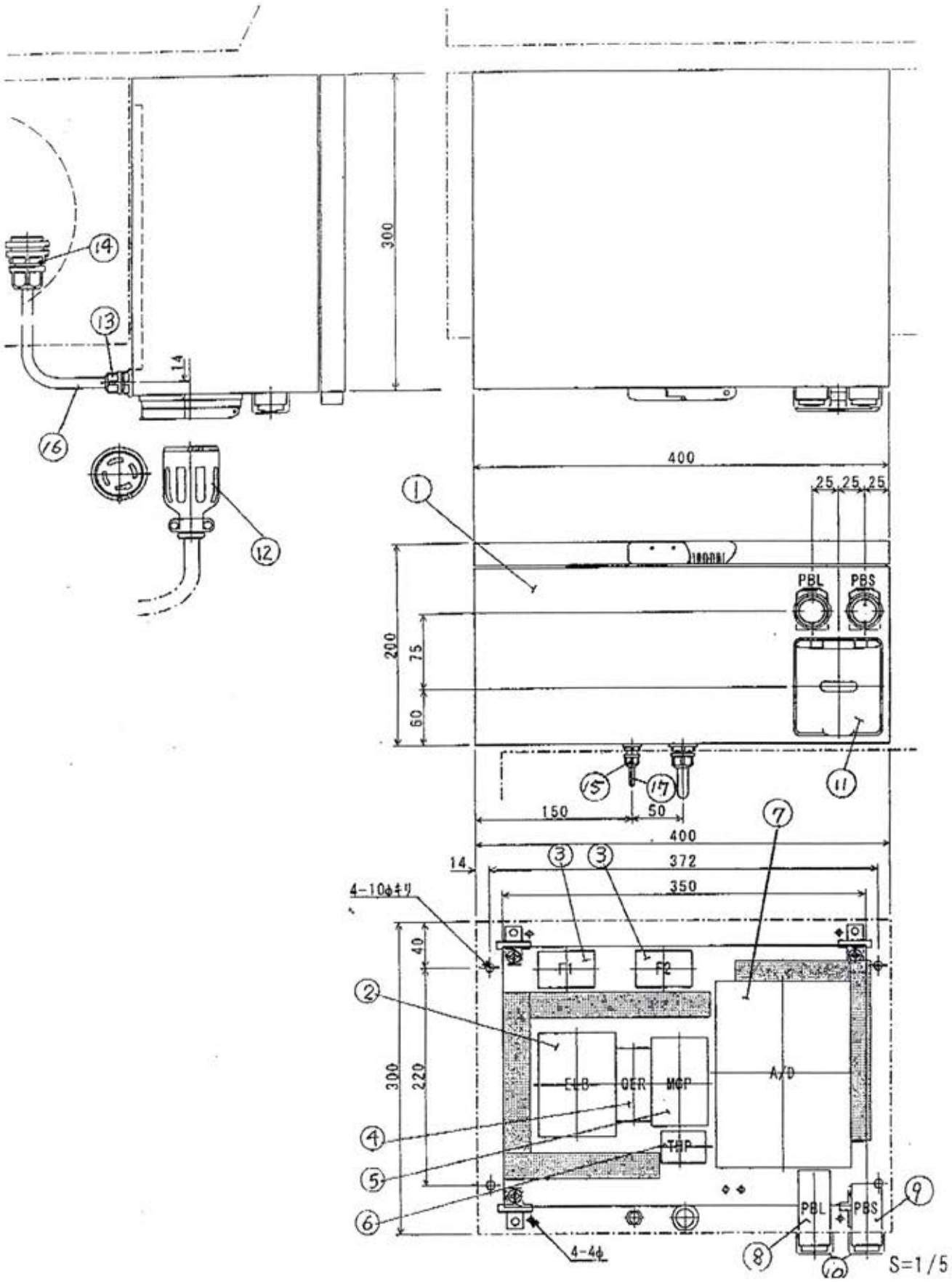

URW 095/295 CR(E)

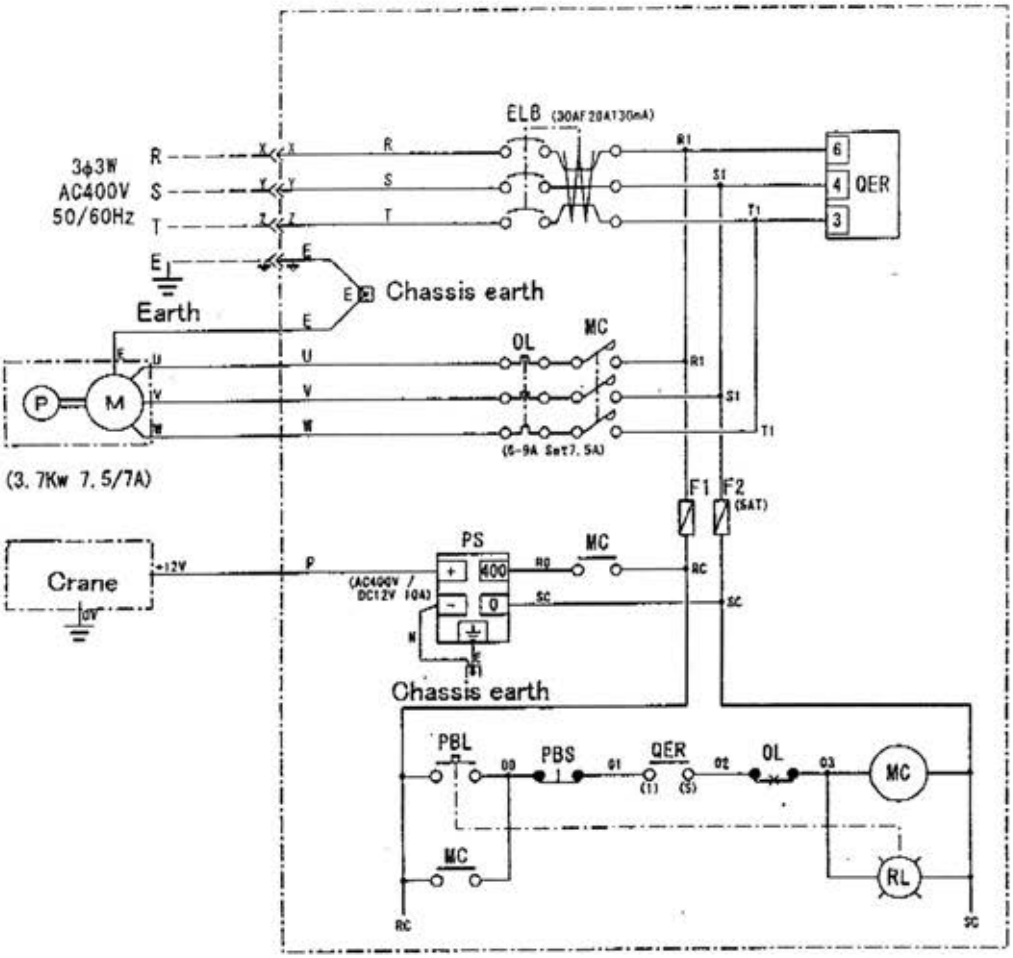

URW 095/295 CR(E)

AC400V Hydraulic Circuit for 095/295/376/506

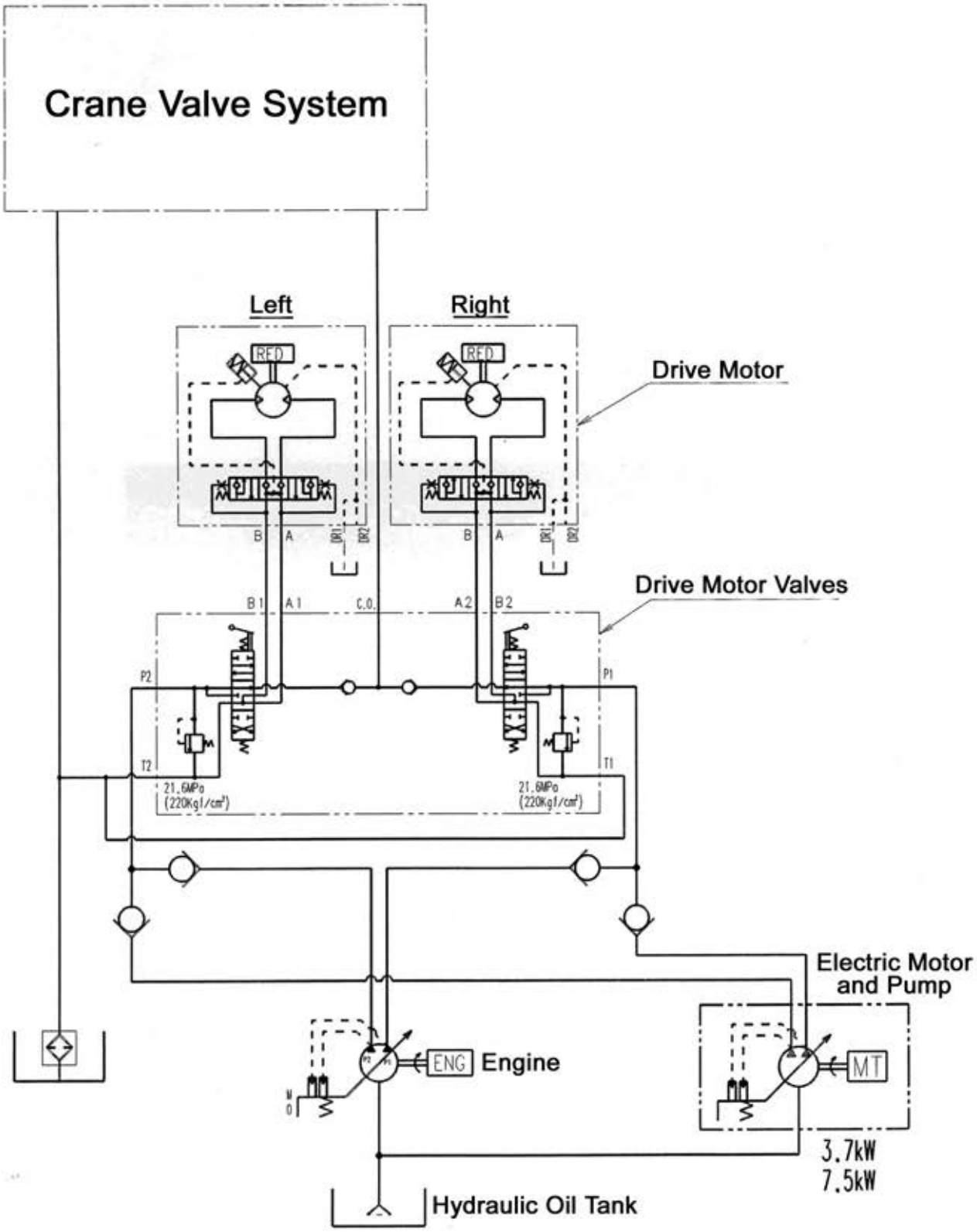

Parts List (URW 095 CR(E)/URW 295 CR(E))

No	Symbol	Part Name	Part No	Type	Company	Qty
1		Regulation Box	750716010	CL20-34	Nittou	1
2	ELB	Earth Leakage Circuit Breaker	750319010	EG33C/20-30-MA	Fuji Electric	1
		Terminal Cover		BZ6TSH10C3	Fuji Electric	1
3	F1,2	Fuse	750309025	AFaC-5	Fuji Electric	2
		Terminal Cover		GC-30	Fuji Electric	2
4	QER	Right Rotation Relay	750307049	QE-40N	Fuji Electric	1
5	MCP	Magnetic Contactor	750319012	SC-05H/2a-AC400V	Fuji Electric	1
6	THP	Thermal Relay	750307050	TK-ON/6A	Fuji Electric	1
		Terminal Cover		SZ-JW2	Fuji Electric	1
7	A/D	Converter	750111007	46904	Legrand	1
8	PBL	Light Switch Button	750303057	AR22EOL-10T3G	Fuji Electric	1
9	PB2	Switch Button	750303058	AR22EOR-01R	Fuji Electric	1
10		Waterproof Cap	750714001	AR9D797	Fuji Electric	2
11		Connector Inlet	750501210	4365NW	American	1
12		Connector Wire	750501211	4364R	American	1
13		Connector	750501212	OA-W1611	Ohom	1
14		Connector	750501213	OA-2	Ohom	1
15		Connector	750501214	OA-W15M07	Ohom	1
16		Wire	750604054	2PNCT 1,25sq 4c		1
17		Wire	750604056	2PNCT 1,25sq 1c		1

i. How to use Searcher Hook

How to Get Searcher Hook

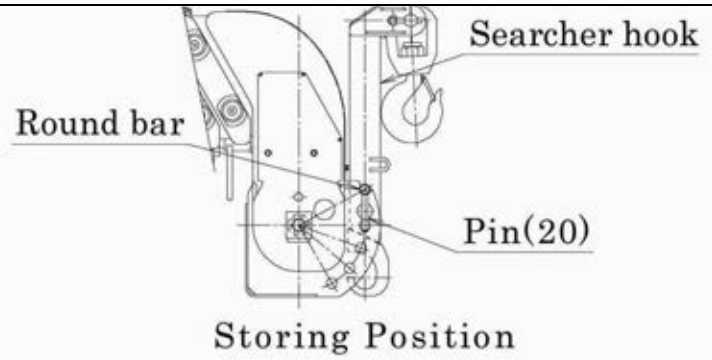	**Remove pin (20) and turn searcher hook around the round bar**
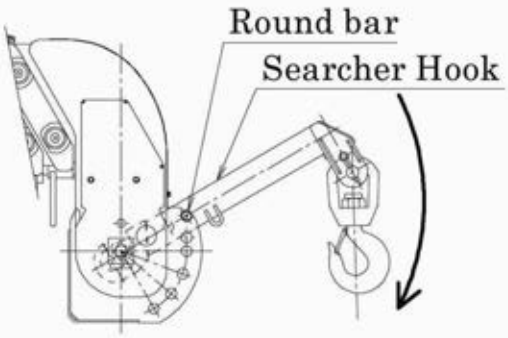	**It is rotated until the searcher hook hangs to the top sheave pin**
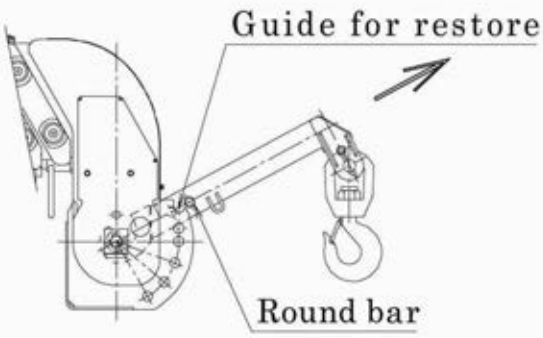	**Searcher hook is pulled obliquely upward and turn searcher hook around the top sheave pin**
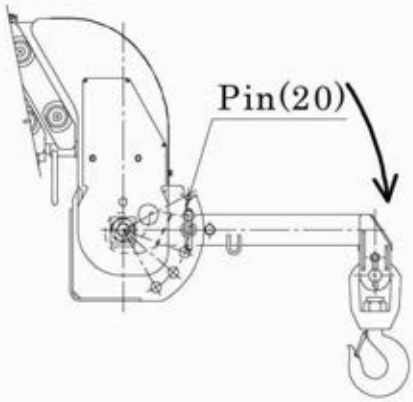	**The pin (20) is inserted at the tilt angle that want to be used. Put up the snap pin so as not to come off**

j. How to Store Searcher Hook

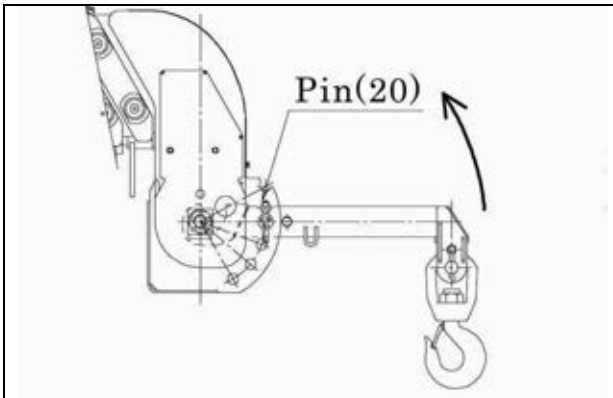	Remove pin (20) and turn searcher hook around the top sheave pin
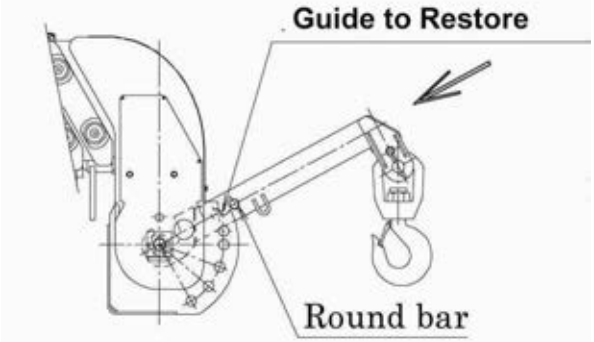	Put the round bar on the notch of the guide
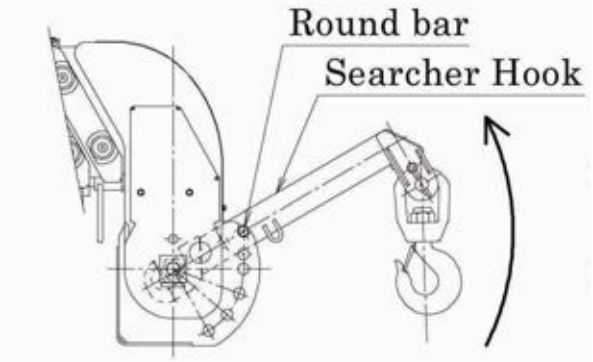	Remove the hook from the top sheave pin and around the round bar on searcher hook like this drawing
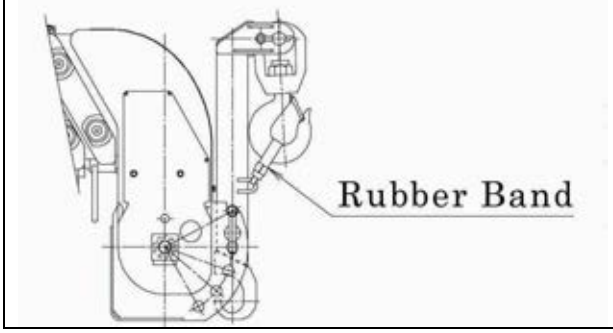	Insert pin (20) into the hole for restore on bracket to be the store position. Fix the hook with the rubber band during travelling

Intentionally Blank

17. REMOTE CONTROL

a. Description of Remote Control

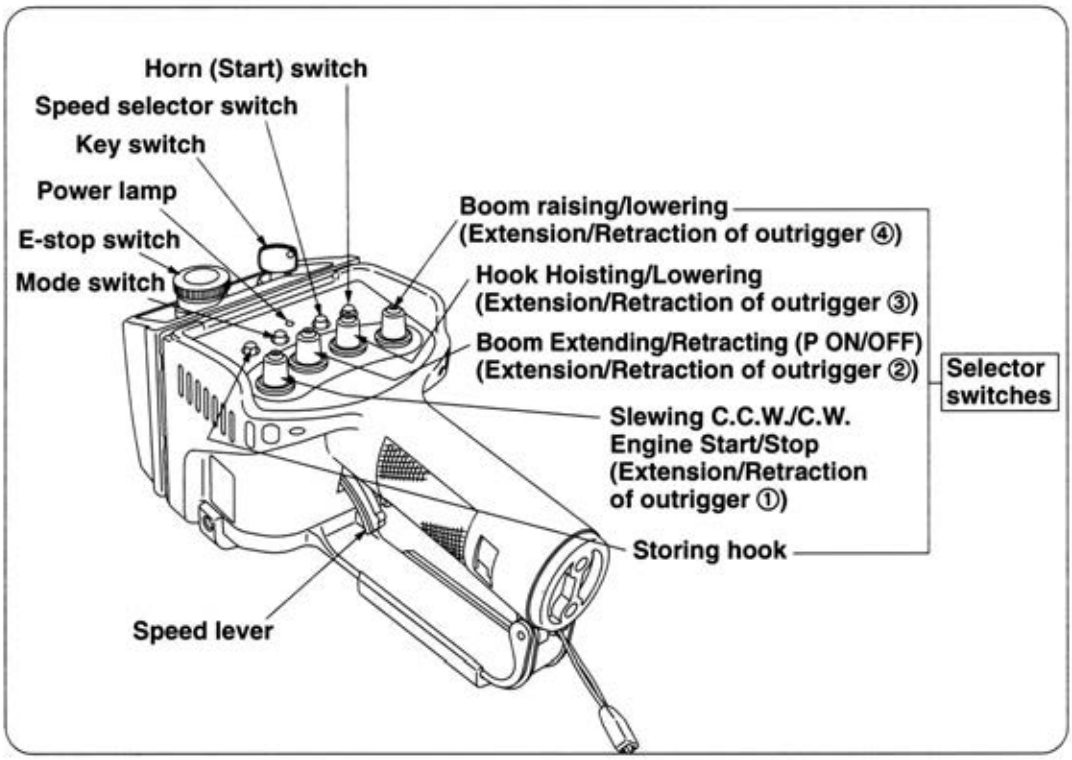

3. Designation of each part of receiver

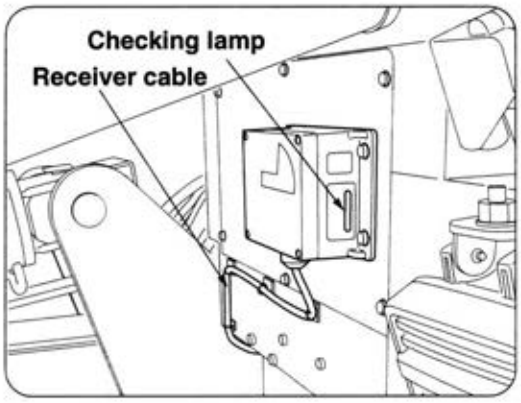

*Receiving antenna is built in the receiver.

Radio Remote Handset showing key

b. Description of Control Box Parts

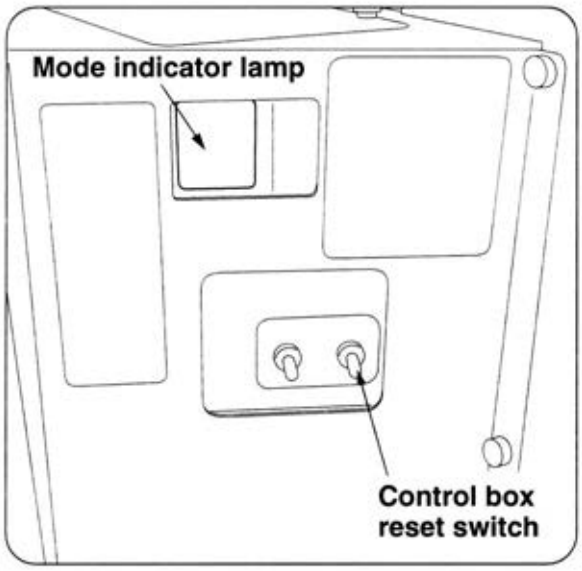

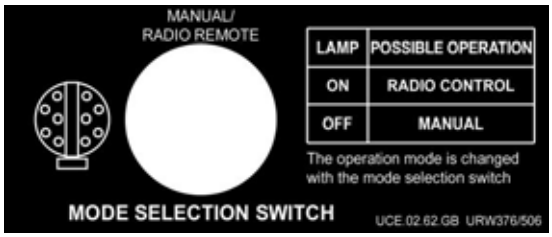

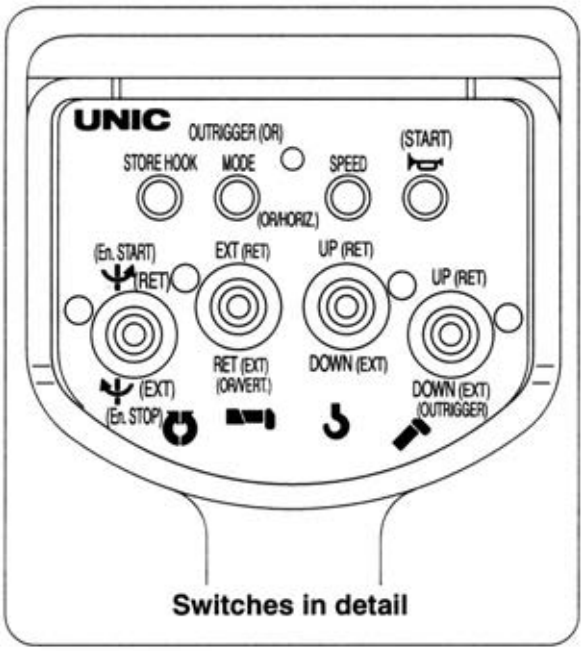

18. LOAD METER

a. LOAD METER – OPERATION

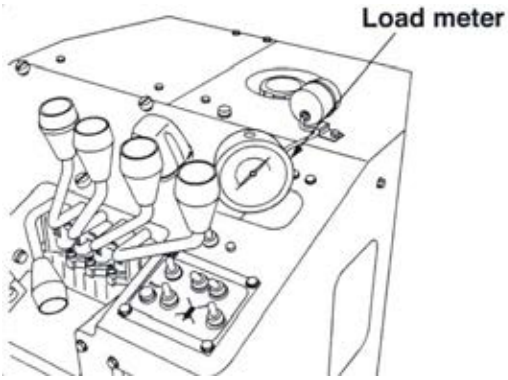

- The meter shows the weight of a load being hoisted. Read the scale band corresponding to the number of falls of rope

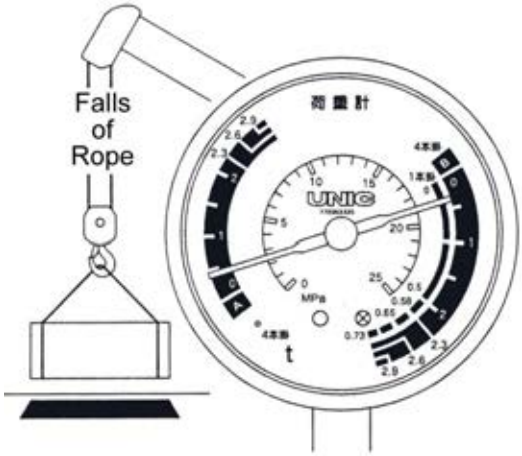

095 Load Meter

- The dial of the meter has scale bands corresponding to the A and B bands on the boom load indicator for 4 fall systems.
- It also has a scale for the 1 fall system

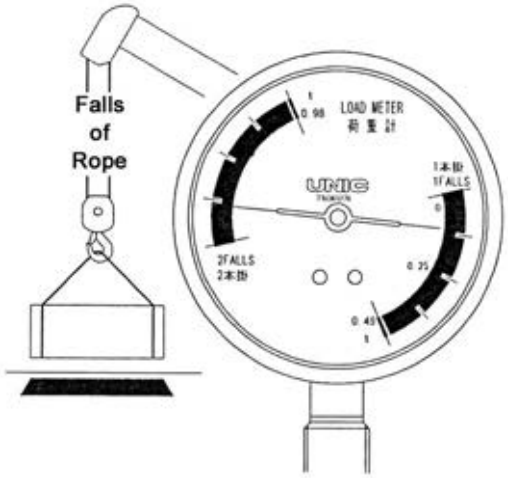

094 Load Meter

- The dial of the meter has scale bands for 2 fall and 1 fall systems

i. Using the 094 Load Meter

Attach hook to load, use a lifting sling which will allow the hook to have sufficient free upward travel (approx 30 – 60cm) before the load is hoisted.

Run the engine at slow speed. Adjust the hoisting speed of the hook so that the needles point to 0 on the meter. Continue to lift the cargo with the hoist lever in EXACTLY the same position. Any movement from this position will cause very inaccurate readings.

For Example:

With the boom extended to 1+2+3 using a 2 fall system. The boom load indicator shows (point a) that the crane can lift 0.5t at that extension and elevation. The needle of the indicator is within the B scale of the indicator, therefore we would use the B scale of the load meter.

Read the load meter as the load is being hoisted by the above method to approximately 30cm off the ground.

The meter shows (point b) a weight of 0.24t. This means that the crane is being operated with a safety margin of 0.26t in this example.

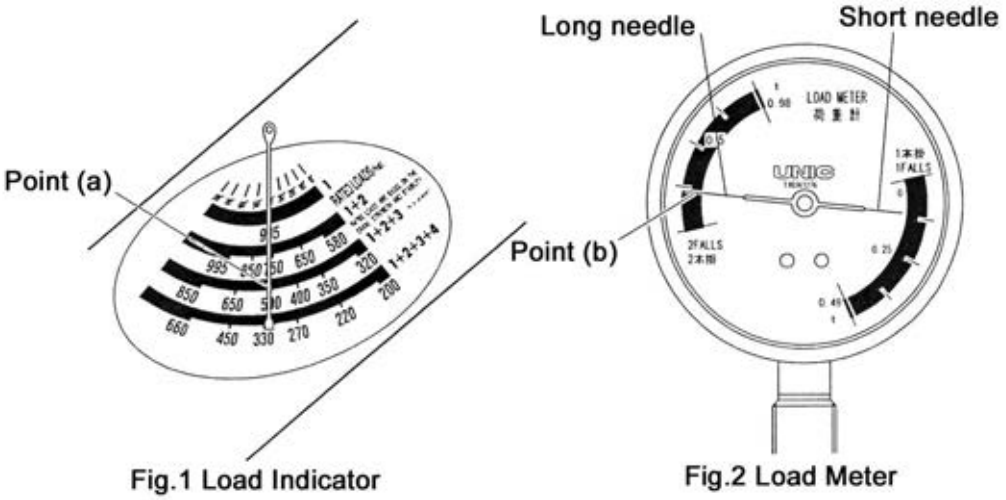

Fig.1 Load Indicator

Fig.2 Load Meter

ii. Using the 095 Load Meter

Check the boom load indicator to check whether the pointer is in Band A or Band B. This will determine which 4 fall scale to use on the meter.

Attach hook to load, use a lifting sling which will allow the hook to have sufficient free upward travel (approx 30 – 60cm) before the load is hoisted.

Run the engine at slow speed. Adjust the hoisting speed of the hook so that the needles point to 0 on the meter. Continue to lift the cargo with the hoist lever in EXACTLY the same position. Any movement from this position will cause very inaccurate readings.

For Example:

With the boom extended to 1+2+3 using a 4 fall system. The boom load indicator shows (point a) that the crane can lift 0.7t at that extension and elevation. The needle of the indicator is within the B scale of the indicator, therefore we would use the B scale of the load meter.

Read the load meter as the load is being hoisted by the above method to approximately 30cm off the ground.

The meter shows (point b) a weight of 0.5t. This means that the crane is being operated with a safety margin of 0.2t in this example.

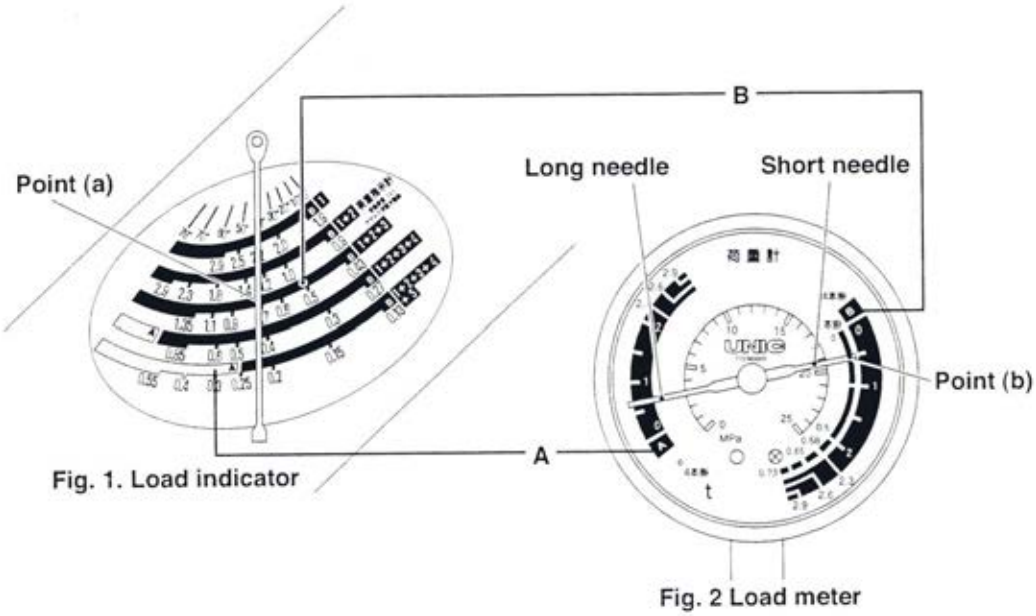

Fig. 1. Load indicator

Fig. 2 Load meter

Intentionally Blank

b. 295 RATED CAPACITY INDICATOR – OPERATION MANUAL

1. General description of the indicator system

The UNIC W2245 Automatic Rated Capacity Indicator system has been designed to provide the crane operator with the information necessary to operate the crane safely and within the maximum permitted loading specified by the crane manufacturer.

The indicator functions, by automatically monitoring the load applied to the crane and continuously compares this load with the maximum permitted load for each crane position. The display unit of the indicator system provides continuous information relating to crane loading and warns the operator when approaching or exceeding the limit of the crane capacity.

View of W2245 Display

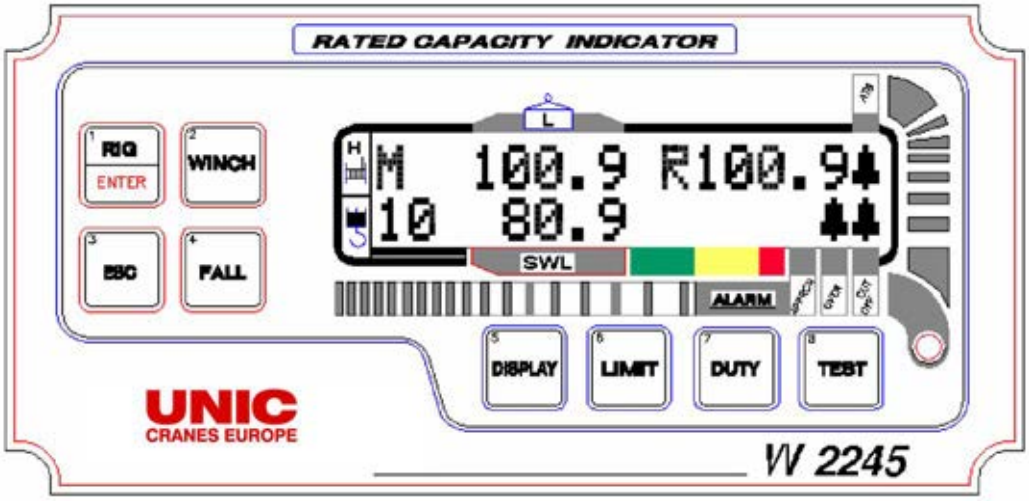

The display unit indicates the status of the crane to the operator. The top row of the LCD screen in normal operation mode shows Winch used, Rigging mode available (flashing R if available), Hook Load, Load Radius and Angle (e.g. A30 is 30 degrees). The bottom row, in normal operation mode, shows number of Falls, Rated Load, a bar graph for %SWL and either the current duty number (e.g. D01 is duty 1) or Alarms status.

The winch used is shown on the top left part of the display. 'M' indicates main Winch.

The **NUMBER OF FALLS** is shown on the bottom left part of the display

The **HOOK LOAD** and **RATED LOAD** are gross loads, including the weight of the block and any lifting slings used.

The **LOAD RADIUS ('R')** is measured horizontally from the crane centre of slew to the crane lifting point (usually the hook).

The **BASE BOOM ANGLE ('A')** is the angle of the centre line of the bottom section of the boom (usually parallel to the top of the boom) to the horizontal.

1.1 Description of keyboard

There are eight pushbuttons on the display keypad. Button 1 has a double function. The top row of the button shows the main function and the bottom row shows the secondary function. The Main function is used in normal mode, while the secondary one is used for menu navigation and editing purposes.

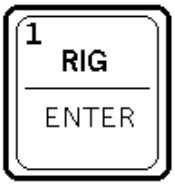

Used to by-pass permanently the lockout while rigging the crane. The Enter function is used to confirm other actions.

Used to select the Winch used. The secondary «UP» function is used to scroll up in menu or increase value being edited. This button will be referenced to this second function in this manual.

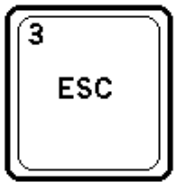

Used to return to normal mode.

Used to set the number of FALLS for the selected Winch. The secondary «DOWN» function is used to scroll down in menu or decrease value being edited. This button will be referenced to this second function in this manual.

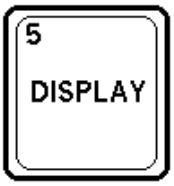

Pressing this button gives access to other information by changing the display screen temporarily.

Used to access the LIMIT menu.

Used to access Duty selection mode.

Used to run the system test procedure

1.*2* ***Description of alarms***

Four warning indicators with a bell shape are provided on the display screen. They function as follows:

ATB: «ON» if an Overwinch/Two block condition. This may stop hoisting of the winch operation dependant on crane model.

APPRCH: Approach warning. «ON» when the load on the hook is between the approach and overload limits specified during calibration. The percentage level may be changed during the calibration process *(see note)*. This is accompanied by the operation of an audible warning device that is fitted to the control box display.

OVER: Overload warning. «ON» when the load on the hook is over a percentage of the rated capacity. The percentage level may be changed during the calibration process *(see note)*. This is also accompanied by the operation of an audible warning device that is fitted to the control box display.

CUT OFF: Motion Cut. «ON» when the load on the hook is over a percentage of the rated capacity. The percentage level may be changed during the calibration process *(see note)*. This is usually associated with, for example, booming down, telescoping out or hoisting up. The exact operation is specific to the crane model.

Note: The alarm level percentages should be set to comply with local regulations, if in doubt consult Wylie Systems for guidance

When a warning alarm is activated, the red lamp illuminates giving a visual warning.

ROPE: This warning will flash at the «NUMBER OF FALLS» indicating that the rated capacity is limited by the winch rope if less than the normal falls for lifting full capacity for the configuration are rigged and set.

2. ***Operating procedure***

2.1 ***Warning***

The W2245 Wylie Rated Capacity Indicator is to be regarded only as an aid to the operator . When the parameters are set correctly, the indicator will warn the crane operator of a potential overload condition that could cause damage to equipment, property, and/or injury to the operator or site workers in the vicinity of the crane and its load.

This system must never be used, under any circumstances, as a substitute for the good judgment of a crane operator when carrying out approved crane-operating procedures. Responsibility for the safe operation of the crane lies with the crane operator. The indicator equipment will not necessarily prevent crane damage due to overloading and related causes if not set properly.

The safe operation of the crane is the sole responsibility of the operator who must observe and obey all warnings and instructions supplied by Wylie Systems, the crane manufacturer, and the relevant safety authorities.

During normal operation the SWL (safe working load) of a crane must not be exceeded. It should be noted that certain statutory requirements do not permit the SWL to be exceeded except for the purpose of testing.

Before operating a crane equipped with a Wylie system, the operator must carefully read the information in both this manual and the crane manufacturer operator's manual to ensure that he/she fully understands the correct operating procedures and safety standards.

Correct functioning of the system depends upon routine daily inspection. Any suspected faults or apparent damage should be immediately reported to the responsible authority before using the crane.

The W2245 must be set to the crane parameters E.G.[outriggers, tyres 360, tyres front, pick and carry, main boom, rooster, jib, power pin extended, main hoist, auxiliary hoist and parts of lines] before operating the crane.

2.2 *Power On*

Switch on the electrical supply (i.e. crane key switch) to the indicator.

When the indicator is turned on, the system briefly shows the company name, then it displays a configurable message (normally the measuring units), for three seconds. The system then stabilises, and goes into the normal operating mode.

2.3 *Operation*

As shown below, the normal mode displays the hook load, the rated capacity, the load radius or Angle , the hoist used and the number of Falls.

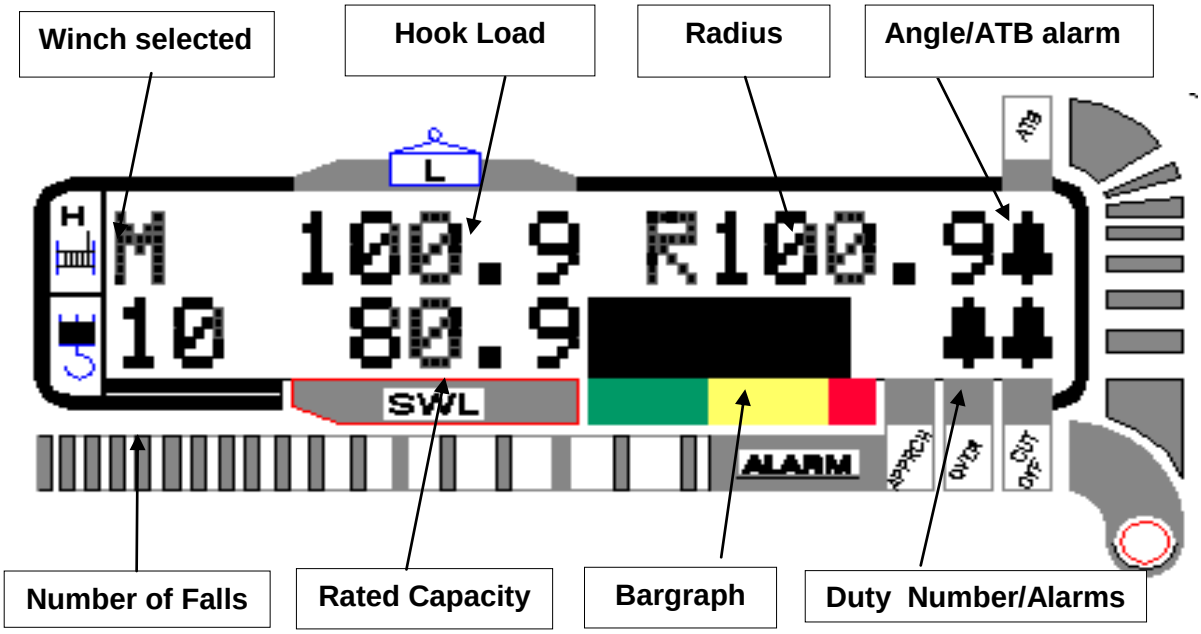

Using button **(#5) DISPLAY** the operator can access other functions of the system like Error report and Diagnostics for maintenance purposes. These functions are displayed for 15 seconds before the system returns to the normal display.

Daily Pre-Use Checklist
UNIC Spider Crane

Northern (Head Office) **Tel: +44 (0)1482 227333**
Central Tel: +44 (0)1302 341659
Western Tel: +44 (0)1384 900388
Southern Tel: +44 (0)203 174 0658
www.hird.co.uk

Machine Model: **UNIC URW 095**		Site Name:
Date Week Commencing:	Fleet No:	Address:
Inspected by:		

	Daily Pre-use Checks	M	T	W	T	F	S	S	COMMENTS
1	Are all operators manuals present and readable								
2	Is the Report of Thorough Examination (LOLER) in date								
3	Complete a visual walk around / Inspection for any noticeable defects								
4	Are all safety information decals present and readable								

Check the following components or areas for damage, or missing parts & unauthorised modifications:

5	Fuel Level								
6	Engine oil Level								
7	Hydraulic oil level								
8	Gauges and switches								
9	Electrical components, wiring, connectors,								
10	Hydraulic hoses								
11	Nut, bolts & other fasteners								
12	Tracks								
13	Outriggers								
14	Outrigger Pads								
15	Winch Cable serviceable								
16	Horn								
17	Audible / Visual warnings (Alarms & Beacons)								
18	Controls, Buttons, Joysticks, Remote Control								
19	Boom sections free from defects or debris								
20	Fly Jib free from defects (where applicable)								
21	Hook in serviceable condition								
22	SLI unit operational								
23	Drive function test								
24	Crane function test								
25	Emergency Stop button(s) function								
26	Carry out full function test								

Is the machine safe to use? (please circle)	YES / NO	YES / NO	YES / NO	YES / NO	YES / NO	YES / NO	YES / NO	
Operator's Initials								

Result of Inspections: List defects or state "No Defects"

Signature:	**Name:**	**Date:**