www.hird.co.uk

OPERATORS MANUAL

MAEDA MC285-2

850KG - SEARCHER HOOK

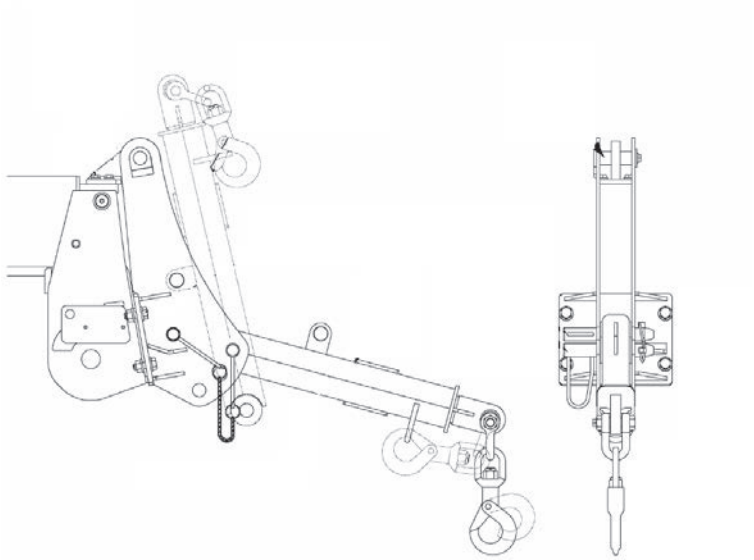

Northern (Head Office)
Tel: +44 (0)1482 227333

Central
Tel: +44 (0)1302 341659

Western
Tel: +44 (0)1384 900388

Southern
Tel: +44 (0)203 174 0658

CONTENTS

1. INTRODUCTION

This manual describes only for “MC285C-2 850kg Searcher Hook”. For operation of MC285C-2 machine, please see “MC285C-2 Operation Manual”.
This manual is a guidebook for safe and effective use of this machine.
This manual describes the procedures for proper operation and maintenance of the machine. Warnings and precautions defined in this manual shall be observed for safety.
Many accidents are caused by the operation, inspection, or maintenance where basic precautions have not been observed.
Be sure to read this manual and understand the procedures for machine operation, inspection, and maintenance thoroughly before performing any operation of this machine.
Failure to observe the basic precautions defined in this manual may lead to hazardous accidents.

⚠ WARNING

Failure to use this machine properly can lead to serious personal injury or death.
Operators and maintenance personnel must always read this manual and “MC285C-2 Operation Manual” prior to operation or maintenance of this machine.
Store this manual at a designated place for reference when necessary. All personnel who work on this machine are to carry out periodic reference.

- **Only those who have a thorough understanding of the fundamental procedures provided in this manual and “MC285C-2 Operation Manual” are qualified to perform machine operation.**

- **Keep this manual and “MC285C-2 Operation Manual” handy for reference when necessary.**

- **Should you lose or damage this manual or “MC285C-2 Operation Manual”, contact Maeda or our sales service agency immediately for ordering a new manual.**

- **This manual and “MC285C-2 Operation Manual” should always accompany this machine upon transfer of the machine to the next owner.**

- **This manual has adopted data that was available at the time of the creation of the manual. The contents of this manual, including maintenance specifications, tightening torque, pressure, measuring method, adjustment value, and illustrations, are subject to change due to refinement of the machine, without notice.**
  Machine maintenance may be susceptible to revisions. Always obtain the latest information from Maeda or our sales service agency before performing maintenance of this machine.

For safety instructions, see “2. For Safe Use of Machine” on page 1-3 and “Safety” on page 2-1 in “MC285C-2 Operation Manual”.

2. FOR SAFE USE OF MACHINE

This manual classifies the risks into the following three categories to present the details of the safety labels in easy-to-understand manner.

⚠ DANGER

This denotes that there is an imminent hazard which will cause serious personal injury or death.
The method of hazard circumvention is stated.

⚠ WARNING

This denotes that there is a hazard which can cause serious personal injury or death.
The method of hazard circumvention is stated.

⚠ CAUTION

This denotes that there is a potential hazard which may cause minor or moderate personal injury or serious damage to this machine.
The method of hazard circumvention is stated.

This manual also provides the following to indicate what must be observed for the sake of the machine and what will be of help.

CAUTION

This denotes that failure to handle the machine properly may damage the machine or shorten its life.

NOTES

This denotes helpful information.

Not only procedures for operation, inspection, and maintenance of this machine described in this manual and “MC285C-2 Operation Manual” but also safety precautions should pertain to the case where this machine is only used for specified tasks.
Every circumstance incidental to use of this machine is unforeseeable, and therefore, cautions given in this manual and on this machine do not necessarily cover every safety-related issue.
Necessary safety actions should be taken under your responsibility if operation, inspection, and maintenance in a situation that is not described in this manual or “MC285C-2 Operation Manual” are performed.
Even in the above case, never attempt work and operations that this manual or “MC285C-2 Operation Manual” prohibits you to do.

3. SAFETY DECAL LOCATIONS

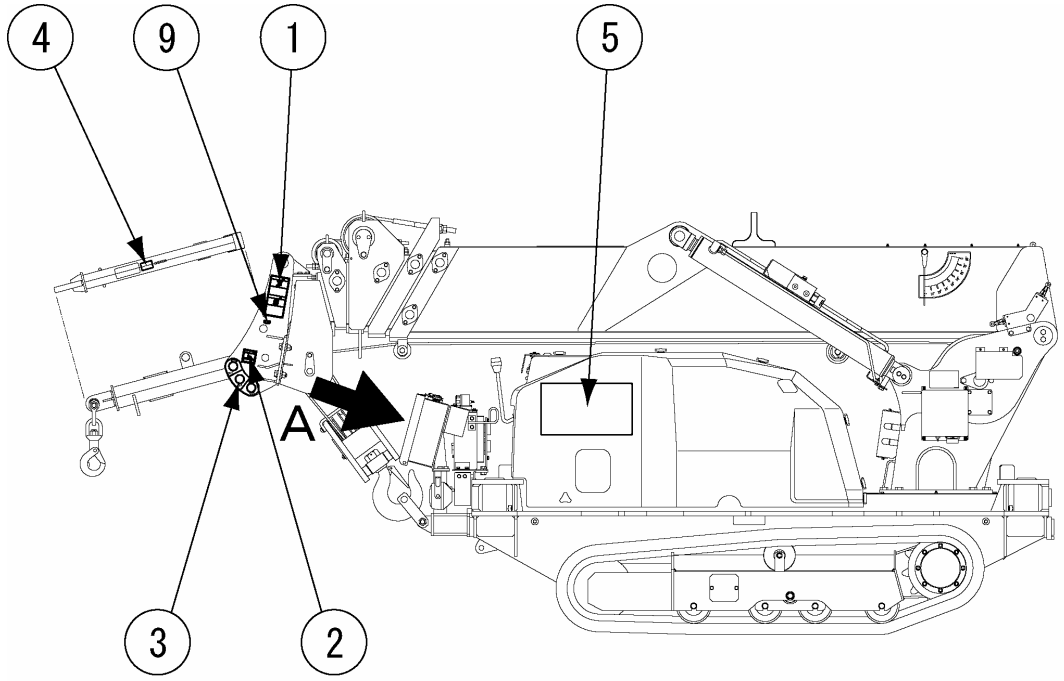

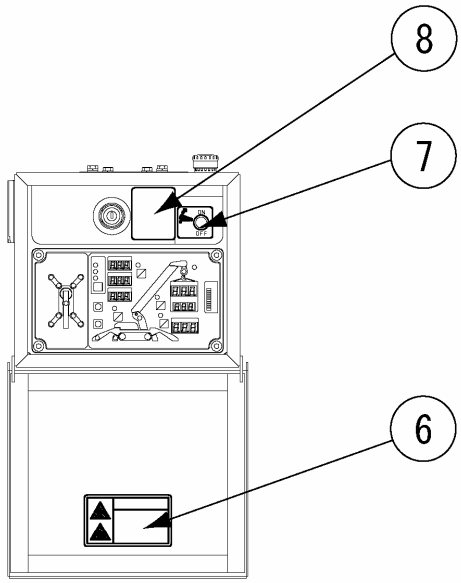

View A (ML Display)

SAM07810E

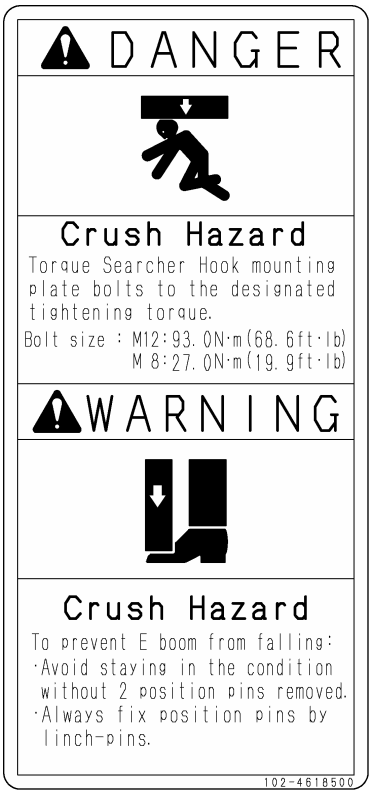

①102-4618500

②102-4608500

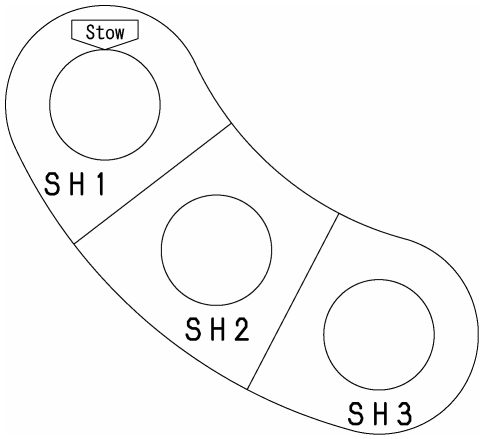

③Right side 102-4618700
Left side 102-4618800

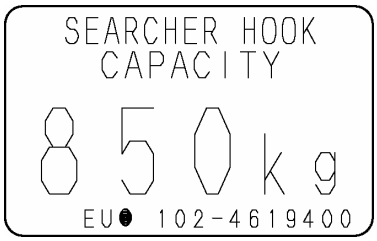

④102-4619400

Operating Range For 850kg Searcher Hook

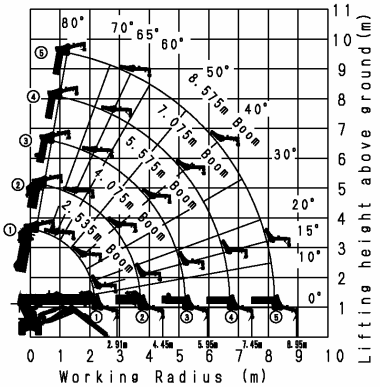

MC285C-2 RATED TOTAL LOAD CHART

Maeda Seisakusho Co., Ltd.

850kg Searcher Hook Mode

The unit of rated total loads are in kg.

Working Radius (m)	2.535m BOOM BOOM FULLY RETRACTED			4.075m BOOM WHEN BOOM 2 IS EXTENDED TO ANY EXTENT, USE RATINGS FOR 2.536m-4.075m BOOM			5.575m BOOM WHEN BOOM 3 IS EXTENDED TO ANY EXTENT, USE RATINGS FOR 4.076m-5.575m BOOM			7.075m BOOM WHEN THE FIRST RANK % ON BOOM 3 IS EXPOSED, USE RATINGS FOR 5.576m-7.075m BOOM			8.575m BOOM WHEN THE SECOND RANK % ON BOOM 3 IS EXPOSED, USE RATINGS FOR 7.076m-8.575m BOOM			Working Radius (m)
	LOADED BOOM ANGLE (SH3)	OUTRIGGER POSITION MAX	OUTRIGGER POSITION OTHER THAN MAX	LOADED BOOM ANGLE (SH3)	OUTRIGGER POSITION MAX	OUTRIGGER POSITION OTHER THAN MAX	LOADED BOOM ANGLE (SH3)	OUTRIGGER POSITION MAX	OUTRIGGER POSITION OTHER THAN MAX	LOADED BOOM ANGLE (SH3)	OUTRIGGER POSITION MAX	OUTRIGGER POSITION OTHER THAN MAX	LOADED BOOM ANGLE (SH3)	OUTRIGGER POSITION MAX	OUTRIGGER POSITION OTHER THAN MAX	
1.5	80.0°	850	850	71.5°	850	850										1.5
2.0	46.5°	850	820	64.5°	850	820										2.0
2.5	25.0°	850	740	56.5°	850	740										2.5
2.6	2.0°	850	700	49.5°	850	580										2.6
3.0				47.5°	850	540	60.0°	850	400							3.0
3.5				36.0°	850	400	54.0°	850	350							3.5
3.6				34.0°	830	380	53.0°	850	340	62.0°	690	310				3.6
4.0				17.5°	830	290	47.5°	850	300	58.0°	690	270	64.0°	460	260	4.0
4.1				11.0°	820	270	41.5°	730	240	54.0°	640	240	61.0°	430	230	4.1
5.0							30.0°	540	180	48.0°	500	180	56.5°	350	190	5.0
5.5							11.5°	440	150	42.0°	420	160	52.5°	310	150	5.5
5.6							8.0°	420	140	41.0°	400	140	51.5°	300	140	5.6
6.0										35.5°	360	140	46.0°	270	130	6.0
6.5										27.0°	320	110	43.0°	230	110	6.5
7.0										13.0°	290	100	36.0°	200	100	7.0
7.1										7.0°	280	PROHIBITED AREA	33.0°	180		7.1
7.5													32.0°	170	PROHIBITED AREA	7.5
8.0													24.0°	150		8.0
8.5													10.0°	130		8.5
8.61													0.0°	120		8.61

Notes:

1. This Rated Total Load Chart shows maximum allowable capacities. These rated total loads are based on the machine standing level on a firm ground supporting surface, under ideal job conditions and a freely suspended load.
2. Sufficient design tolerance must be used to ensure adequate ground support surface design. The rated total loads are for static conditions only, and do not include dynamic effects of swinging, extending, retracting, lowering, raising, wind or adverse conditions. Crane users must reduce rated total loads ratings to take all conditions into account.
3. The working radius shown in the Rated Total Load Chart is based on practical working radius including boom deflection due to loading. The crane user must calculate and compensate for boom deflection as the load is lifted.
4. Deductions from Searcher Hook Rated Total Load must be made for the weight of the searcher hook, block/ball and all rigging.
5. All capacities above the bold line are based on structural strength and other limitations. All other rated total loads are based on stability, not exceeding 75% of tipping loads.
6. Crane users must consult the Operators Manual for complete details about assembly, operation, maintenance, configuration, and its limitations. Modifications to the crane, other than what is specified or supplied by the original equipment manufacture, can result in a reduction of rated total load ratings.
7. This operating range chart does not include boom deflections.
8. At certain working conditions, moment limiter may display bigger load value than actual load.
9. Loaded boom angle of this Rated Total Load Chart represents for SH3 mode only. See operation manual for loaded boom angle for SH1 and SH2 mode.

⚠ DANGER

TIPPING HAZARD

- When using searcher hook, Moment limiter "number of fall" must be set to 850kg searcher hook mode, and select searcher hook position.
- Before start working, always make sure moment limiter is correctly set to the actual working condition.
- Do not use searcher hook and main hoist hook block/ball simultaneously to hoist load.

EU● 102-2154100

⑤102-2154100

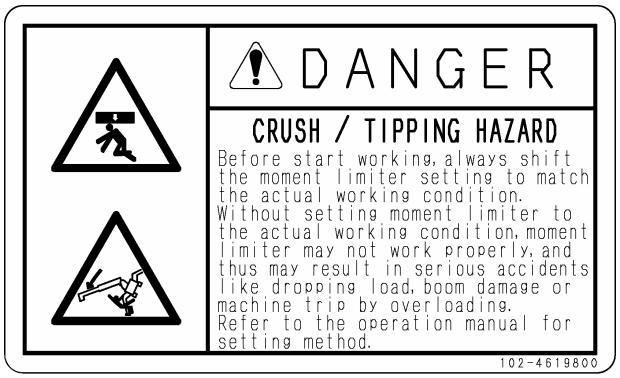

⑥102-4619800

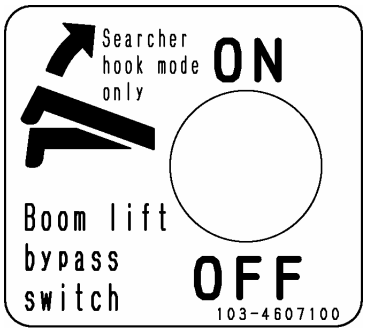

⑦103-4607100

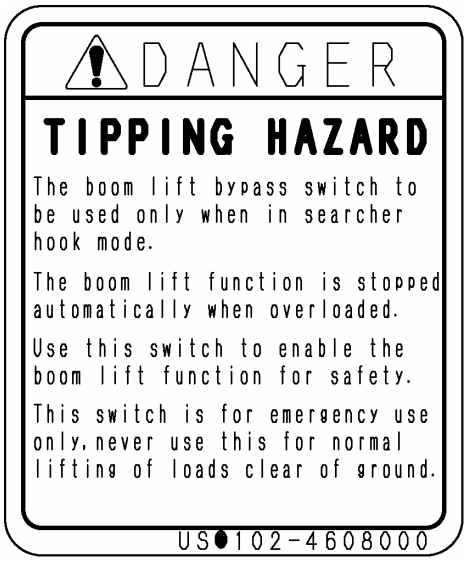

⑧102-4608000

⑨350-4431400

4. SEARCHER HOOK EACH SECTION

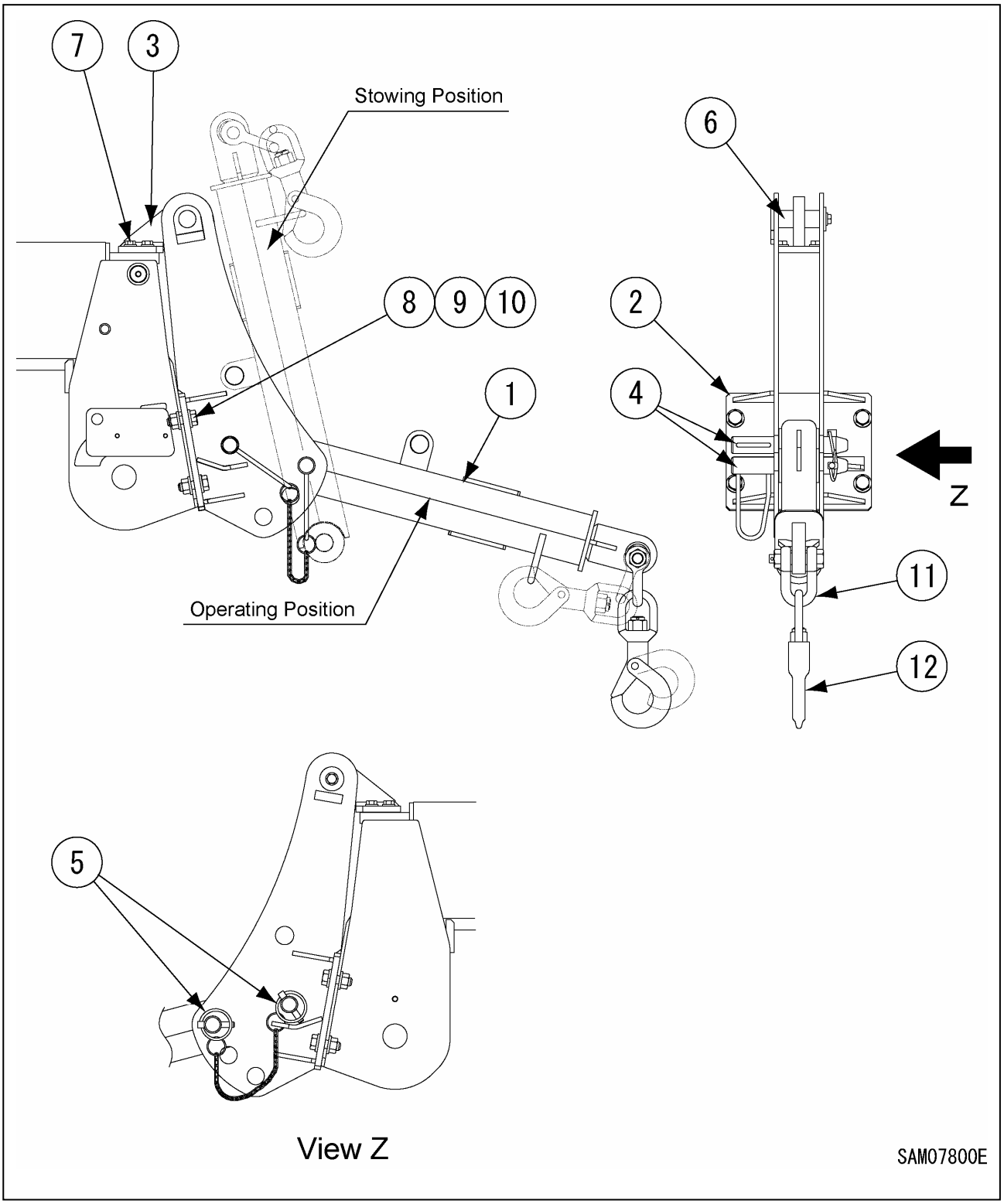

(1) E-Boom
(2) Bracket1
(3) Bracket 2
(4) Position pin
(5) Linch pin
(6) pin
(7) Hexagonal bolt with washer (M8×25L strength 10.9)
(8) Hexagonal bolt with washer (M12×35L strength 10.9)
(9) Nut (M12× grade 1, strength 10)
(10) High tension washer (M12×26×3.2t)
(11) Shackle
(12) Hook

5. MOMENT LIMITER DISPLAY UNIT

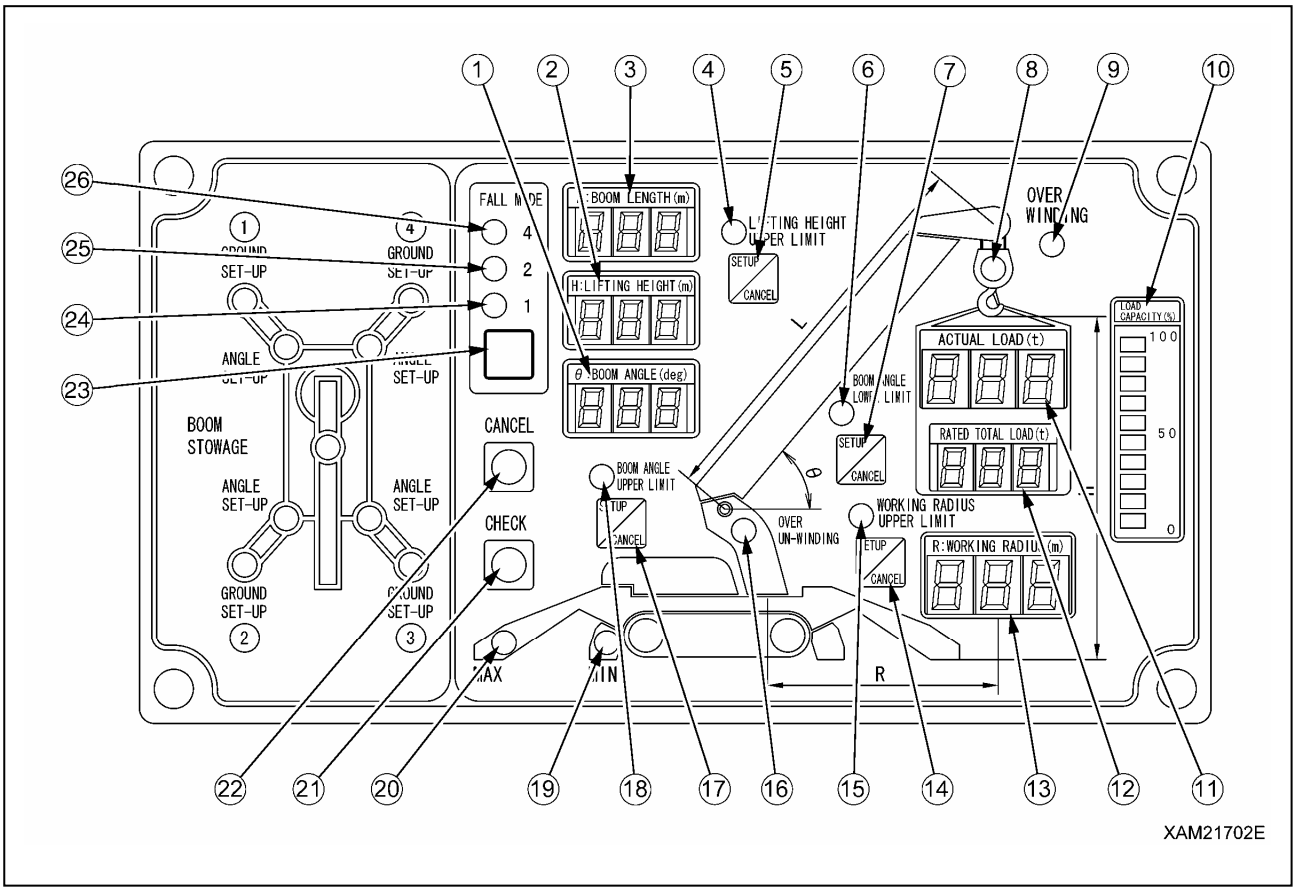

(1) Boom angle display
(2) Lifting height display
(3) Boom length display
(4) Boom lifting height upper limit LED (Orange)
(5) Boom lifting height upper limit switch
(6) Boom angle lower limit LED (Orange)
(7) Boom angle lower limit switch
(8) Load factor LED
(Changes to green, yellow, and red)
(9) Two Block LED (Red)
(10) Load capacity display (Yellow)
(11) Actual load display
(12) Rated total load display
(13) Working radius display
(14) Working radius upper limit switch
(15) Working radius upper limit LED (Orange)
(16) Over un-winding LED (Orange)
(17) Boom angle upper limit switch
(18) Boom angle upper limit LED (Orange)
(19) Outrigger MIN. extension LED (Blue)
(20) Outrigger MAX. extension LED (Blue)
(21) Check switch
(22) Cancel switch
(23) Fall mode / Option selector switch
(24) 1-fall LED (Blue)
(25) 2-fall LED (Blue)
(26) 4-fall LED (Blue)

5.1 DESCRIPTIONS OF SWITCHES MOMENT LIMITER DISPLAY UNIT

⚠ CAUTION

See "Operation 1.5 Moment Limiter in Operation Manual" for how to operate the moment limiter.

5.1.1 WIRE FALLS SELECTOR SWITCH AND WIRE FALLS DISPLAY LED (BLUE)

⚠ DANGER

Fall mode/option mode and searcher hook position must be set as "850kg searcher hook mode". Using 850kg searcher hook other than in 850kg searcher hook mode may prevent issuance of the pre-warnings and boom auto-stop even when the overload is near happening, and thus may result in crane damage or machine trip that may result in serious accidents.

Use this switch to change the number of falls.

- Shift the fall mode/option selector switch (23) on moment limiter display unit to "850kg searcher hook mode" (all LED flashes). Each time you press the switch for 2 seconds or more, the setting of the fall mode changes in the order of "4 falls ➔ searcher hook mode (all LED ON) ➔ 850kg searcher hook (all LED flashes) ➔ single fall ➔ 2 falls ➔ 4 falls ・・・".

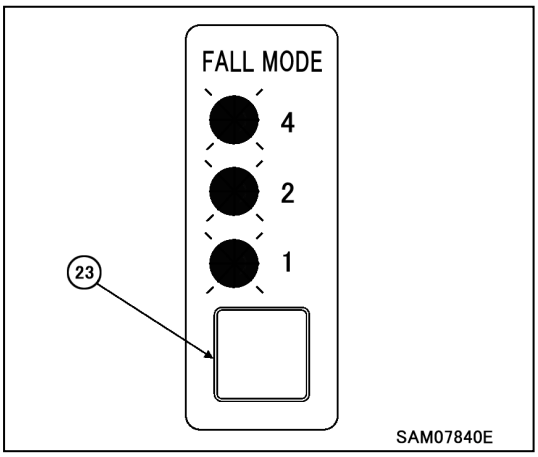

NOTES

When changing the setting, right after doing so, release your hand from the switch, and then press the switch again.

5.1.2 CANCEL SWITCH

⚠ DANGER

Do not use 850kg searcher hook if actual searcher hook position and display of boom length window do not match. Without setting moment limiter to the actual searcher hook position, moment limiter may not work properly and thus may result in crane damage and machine trip that may result in serious accidents.

Use this switch and fall mode/option selector switch to set searcher hook position shown in the boom length window.

- With fall mode set as 850kg searcher hook mode, press fall mode/option selector switch (23) and cancel switch (22) at the same time for 2 seconds or more and shift to set actual searcher hook position.
  See “Searcher Hook position and boom length window display” on page 11 for correct setting.
  Pressing fall mode/option selector switch (23) and cancel switch (22) at the same time for 2 seconds or more shifts boom length display in order of “SH1 ➔ SH2 ➔ SH3 ➔ SH1 ･･･”

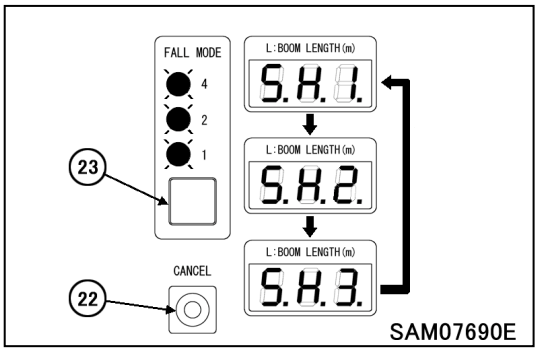

NOTES

When changing the setting, right after doing so, release your hand from the switch, and then press the switch again.
When in 850kg searcher hook mode, searcher hook position mode display and actual boom length value are shown alternately.

Searcher Hook position and mode display in boom length window

SEARCHER HOOK POSITION	MOMENT LIMITER BOOM LENGTH
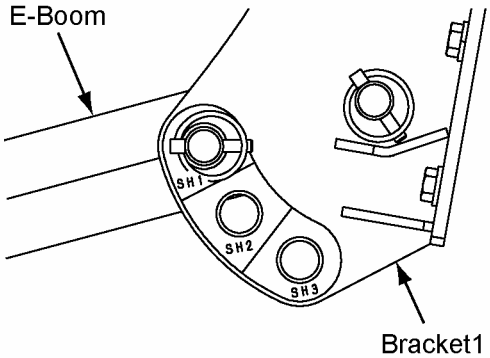 When a E-Boom is set SH1	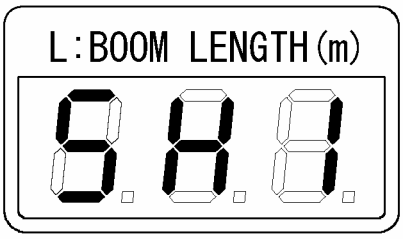
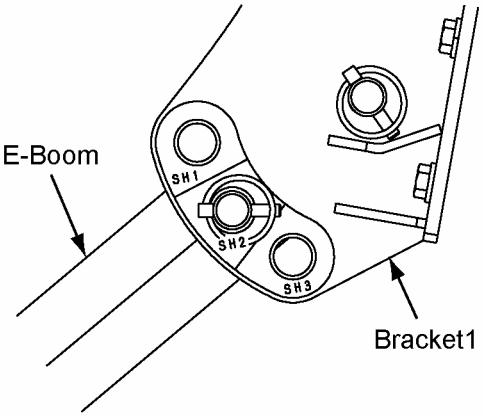 When a E-Boom is set SH2	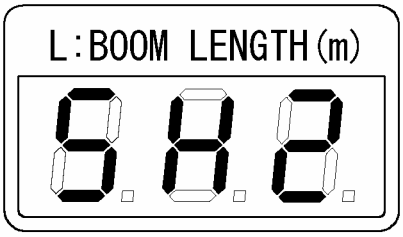
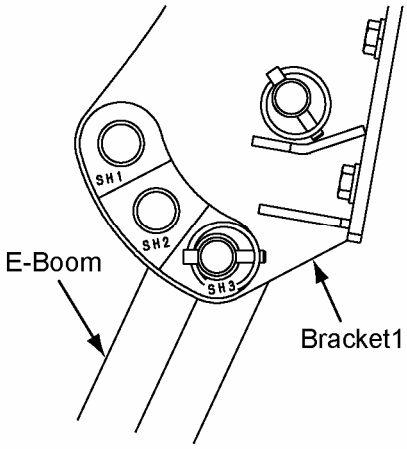 When a E-Boom is set SH3	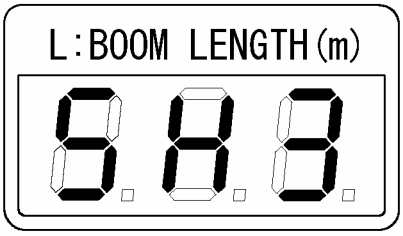

SAM07820E

6. OPERATION

1. See “MC285C-2 Operation 2.12 Outrigger Setting” and set the outrigger

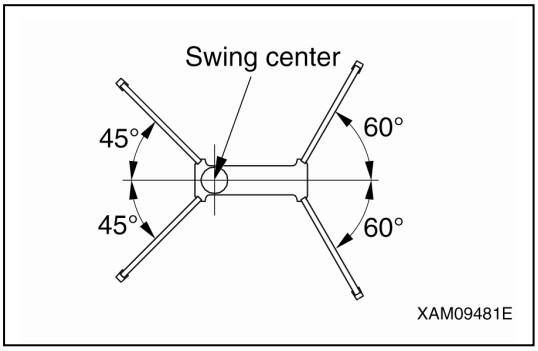

2. Install bracket (1) using M12 bolts with washers (strength 10.9), nuts, and washers to main boom, and install bracket (2) using M8 bolts with washers (strength 10.9) to main boom.
   Using torque wrench, tighten M12 bolts at 93N･m(±14 N･m), and M8 bolts at 27 N･m (±8 N･m).

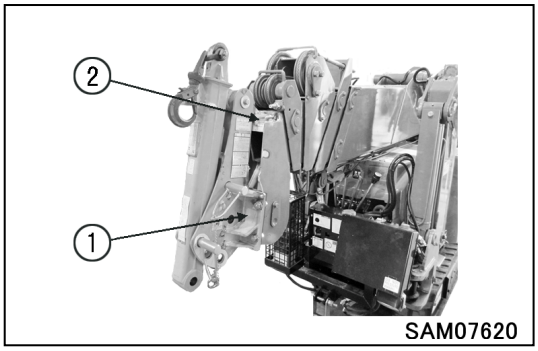

⚠ DANGER

Crash Hazard. Make sure to torque searcher hook mounting plate bolts to the designated tightening torque. To install searcher hook, always use new genuine Maeda bolts, nuts, and washers.

3. Using fall mode/option selector switch (23), set moment limiter to 850kg searcher hook mode (all LED flashes).
   Also make sure the boom length display changes to either SH1, SH2, or SH3.

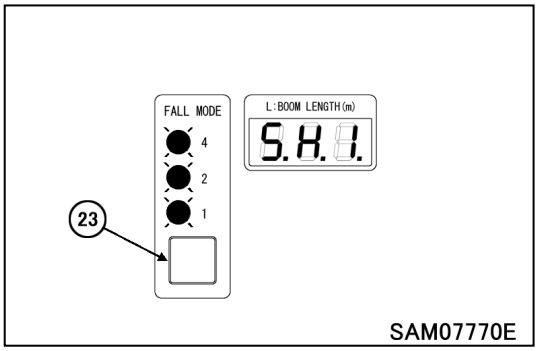

⚠ DANGER

Do not operate 850kg searcher hook without setting moment limiter as “850kg searcher hook mode”. Without setting in correct mode, moment limiter will not work properly, and thus may result in crane damage or serious accident.

⚠ CAUTION

The last status of fall mode/option mode is memorized even after starter switch is turned to the OFF position

4. Remove the Linch pin (4) from the end of position pin (3), and remove the position pin (3).

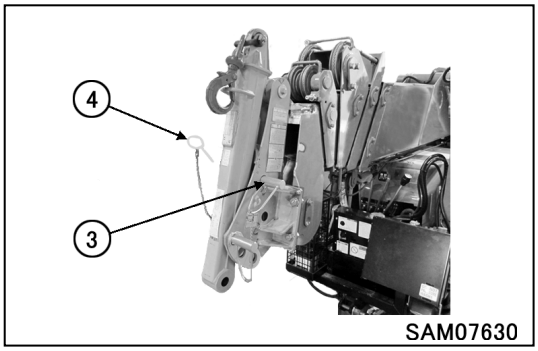

5. Line up the hole (6) in E-boom (5) tip and hole (7) in bracket.

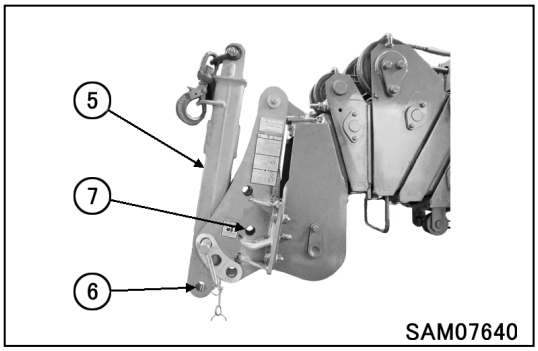

6. Insert the removed position pin (3) (in procedure 4.) through the hole of bracket (7), and secure with lynch pin (4) to the tip of position pin (3).

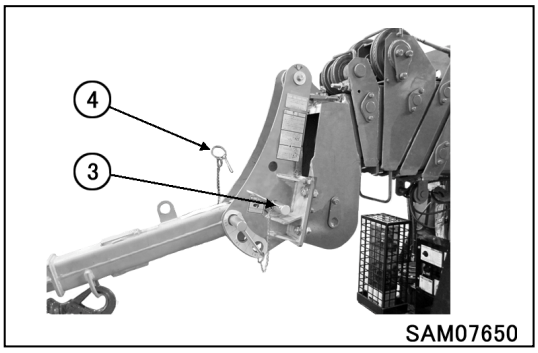

⚠ DANGER

Always secure the position pin (3) with the lynch pin (4). If the position pin falls out during operations, serious injury or damage to the machine may result.

7. Remove lynch pin (9) from the tip of position pin (8), and remove the position pin (8).

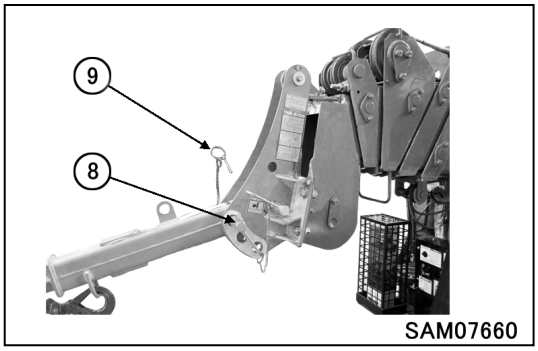

8. Move E-boom (5) to the required angle for the work, and line the holes (1) in the E-boom (5).

⚠ DANGER

E-boom and hook may interfere with each other at certain boom angle conditions, and it may cause a serious accident. Always adjust boom angle to proper position for the work.

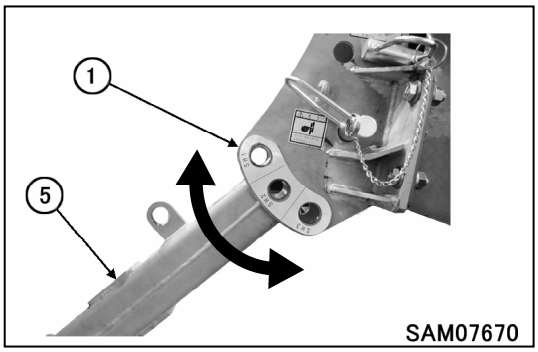

9. Insert the position pin (8) through the hole of bracket, and secure with lynch pin (9) to the tip of position pin (8).

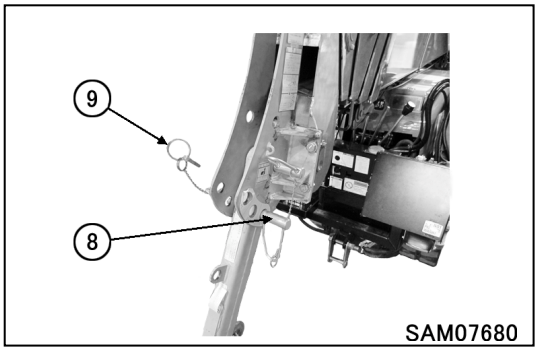

⚠ DANGER

Always secure the position pin (8) with the lynch pin (9). If the position pin falls out during operations, serious injury or damage to the machine may result.

10. With fall mode set as 850kg searcher hook mode, press fall mode/option selector switch (23) and cancel switch (22) at the same time for 2 seconds or more and shift to set actual searcher hook position.
    See "Searcher Hook position and boom length window display" on page 11 for correct setting.
    Pressing fall mode/option selector switch (23) and cancel switch (22) at the same time for 2 seconds or more shifts boom length display in order of "SH1 ➔ SH2 ➔ SH3 ➔ SH1 ･･･"

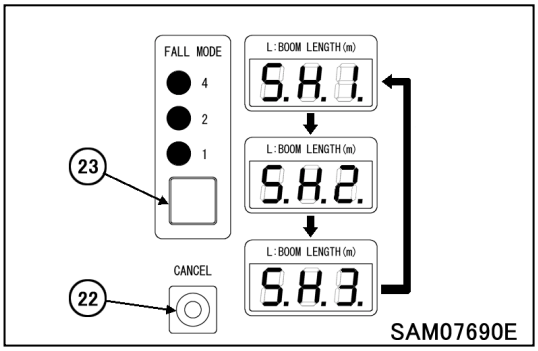

⚠ DANGER

Do not use 850kg searcher hook if actual searcher hook position and display of boom length window do not match. Without setting moment limiter to the actual searcher hook position, moment limiter may not work properly and thus may result in crane damage and machine trip that may result in serious accidents.

11. Attach the load securely to the hook (10) and start operations.

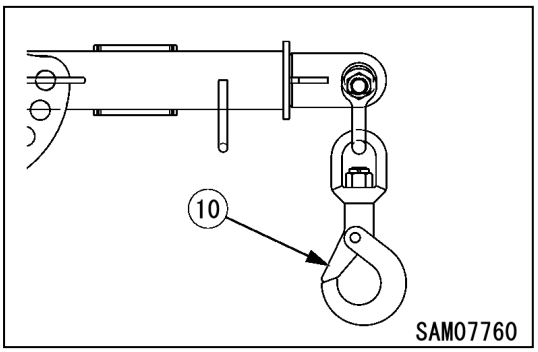

⚠ DANGER

When hoisting a load in 850kg searcher hook mode, raise boom to hoist the load off the ground, and stop for a while to check if the load is safe to hoist.

NOTES

- Characteristic of moment limiter display
  - ･At certain working conditions, moment limiter may display bigger load value than actual load.
  - ･Sudden lever operation increases error in reading load. When operating boom derricking lever, move the lever slowly.

12. When operation is auto-stopped by reaching overload during boom lowering or extending operation, first retract boom to recover into safe load range, and then lower boom to ground load.
    If boom lift must be operated in a situation, use boom lift bypass switch (11) to enable the boom lift function.
    To operate boom lifting using this boom lift bypass switch (11), keep pressing the switch to upper side and operate boom lift at the same time.
    After the work, release the switch and it automatically turns off.

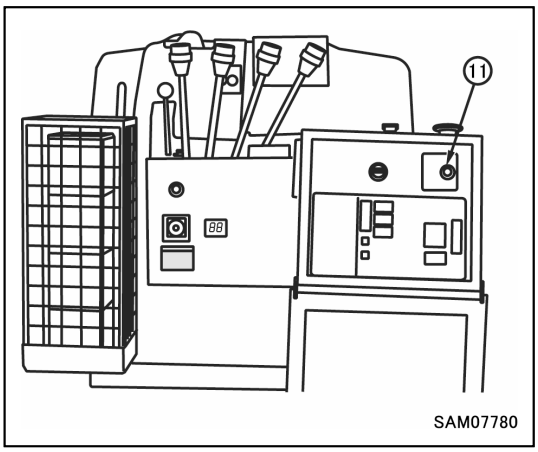

⚠ DANGER

The boom lift bypass switch is to be used only when in searcher hook mode.
The boom lift function is stopped automatically when overloaded.
Never use this for normal lifting of loads clear of ground. Hoisting a load off ground by using this switch may cause damage to the machine and serious accident.

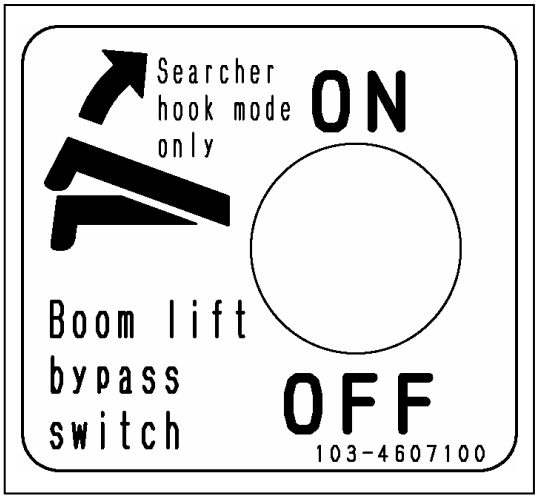

NOTES

In case machine is automatically stopped by entering overload area by boom lowering or boom extending operation, recover from the overload area by retracting boom, or lifting boom by keeping the boom lift bypass switch to ON side.

NOTES

When working envelope is set, and operation automatically stops at the boom upper angle limit or hook height upper limit, boom can be lifted beyond the limit by using this boom lift bypass switch. The boom lift bypass switch is to be used only when in searcher hook mode.

[Caution]
E-boom and hook may interfere with each other in certain boom angle condition.
Do not exceed 50 degrees of boom angle when E-boom position is in SH1, and do not exceed 75 degrees of boom angle when E-boom position is in SH2.

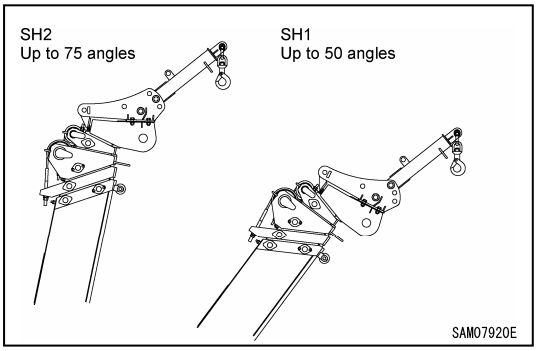

7. INSPECTION AND MAINTENANCE

7.1 LEGAL INSPECTION

If a periodic safety inspection is required by the laws and regulations of your country, perform that inspection in addition to the inspection items listed below.

1. Verify that all safety devices are operating properly.
2. Check the hoist accessories, including the hook block, for problems or damage.
3. Check the structural parts of the machine, including the frame and boom, for cracks, deformation and damage.
4. Check for loose or missing mounting bolts and joints.
5. Verify that the boom operates properly by stopping, extending, retracting, raising, lowering and swinging the boom.

Contact Maeda or a Maeda sales service agency to request inspection and repair service as needed.

7.2 CONSUMABLES

Parts for mounting searcher hook are consumable items. Replace them at periodic inspection or before they reach abrasion limits. Replace consumable items regularly, which will produce economical use of this machine. Always replace with a Maeda genuine item. Check parts catalog for correct part number for parts request.

[CONSUMABLES LIST]

Part	Replacement cycle
Searcher hook fix bolt M12x35L strength 10.9 (4pcs)	Every 6 months or when damage, crack, or squash is found
Searcher hook fix nut M12x1grade (4pcs)	Every 6 months or when damage, crack, or squash is found
Searcher hook fix washer M12x3.2t (high tension)(4pcs)	Every 6 months or when damage, crack, or squash is found
Searcher hook fix bolt M8x25L strength 10.9 (4pcs)	Every 6 months or when damage, crack, or squash is found

Items include a halt period. Contact Maeda or a Maeda sales service agency for part replacement information.

7.3 INSPECTION AND MAINTENANCE LIST

This document only covers 850kg searcher hook kit. For crane body, please refer to “Inspection and Maintenance” and follow its precautions.

7.4 MAINTENANCE PROCEDURES
7.4.1 INSPECTION BEFORE OPERATION

[CHECKING BEFORE STARTING ENGINE]

Check the following in this section without starting the engine and before starting work every day.

[1] CHECKING E-BOOM, FRAME AND HOOK

Check each part of the E-Boom, frame and Hook for cracks, excessive deformation and contamination etc. In addition, check bolts nuts and pins for any looseness, drop and damage etc. If you find any abnormality, repair.

Check hook for deformation, abnormal noise from bearing and correct function of wire rope latch (1).

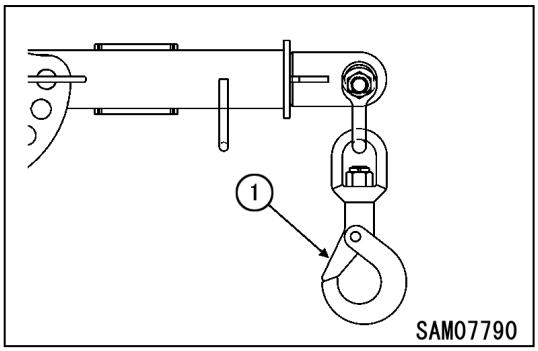

[2] GREASING

Wipe off and clean old grease from contact point (3) of shackle (2) and E-boom hole, and contact point (4) of hook (1) and shackle (2), then apply new lithium grease.

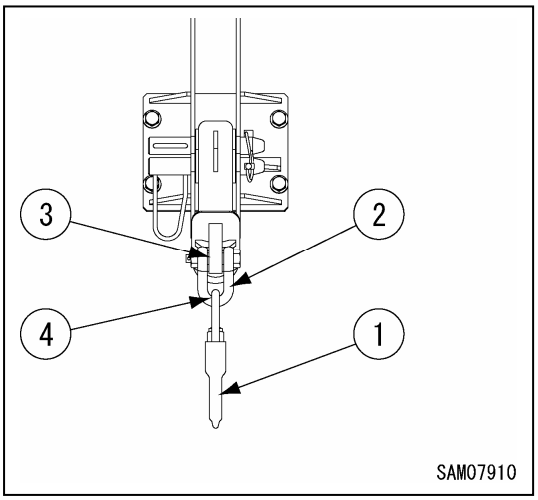

[3] CHECKING SEARCHER HOOK FIX BOLTS

⚠ DANGER

If any damage is found on searcher hook fixing bolts, please exchange for new one's right away. Breakage of bolts will cause the searcher hook to fall off.

Check if bolts used are the designated type.

Also check if there are cracks, damage, squashing, heavy dirt, or rust on bolt.

If any abnormality is found, change the bolt for a new one even it is earlier than expected bolt life.

[4] INSTALLATION CHECK OF POSITION PIN AND LYNCH PIN

Check if position pin is surely secured with lynch pin.

[CHECKING AFTER STARTING ENGINE]

⚠ CAUTION

The checkups described in this section should be carried out after starting the machine.
See "MC285CM-2 Operation manual Operation 2.2 Starting the Engine" and later to execute the engine startup, travelling operations, outrigger operations and crane operations.

[1] CHECKING MOMENT LIMITER FOR OPERATION (850kg SEARCHER HOOK MODE)

⚠ WARNING

If you find any abnormality with the moment limiter, immediately contact us or our sales service agency.

1. Turn the starter switch to the “ON” position.
2. Check with the working status lamp. The red of the lamp lights up for 2 seconds and then the green lights up.
3. Check the moment limiter display unit.
   Verify that no error code is displayed at the “RATED TOTAL LOAD” display on the display panel.
   Check if moment limiter is set as 850kg searcher hook mode, and display in boom length window matches actual searcher hook position.
   See “Searcher Hook position and boom length window display” on page 11 for correct setting.
4. Shift the part of line selector switch on moment limiter display unit to ”850kg Searcher hook mode”.
5. Start the engine and operate the crane as follows to verify if the moment limiter properly displays the value.

Crane Operation and Displayed Parameter	Value Displayed on Moment Limiter
Displayed “boom length” with the boom length at minimum	2.5 m
Displayed “boom length” with the boom length at maximum	8.6 m
Displayed “working radius” with the boom length of “4.4 m” and boom angle of “29.2 °“	SH1 4.2 ± 0.1 m
	SH2 4.2 ± 0.1 m
	SH3 4.1 ± 0.1 m

6. Check if displayed actual load value is equal to the total weight of the load + the hoisting accessory, when the weight of the known load is hoisted. There may be slight error in accuracy depending on boom condition.
7. Operate the crane until the moment limiter display indicates the boom length is "4.4 m" and boom angle is "29.2 degrees", then measure the "boom angle" and "working radius.
   If the measured value(s) differ from the moment limiter display value, contact MAEDA or MAEDA sales agency.
8. Lift up load and check if boom extending or boom lowering operation is auto-stopped when overloaded. If the operation is not auto-stopped in overloaded condition, please contact us or our sales service agency and do not use the machine.
   This checking operation must be operated slowly, and if machine does not auto-stop by overloading, immediately stop the operation, and perform recovery operation caused by overloading.

NOTES

When measuring actual working radius, measure from hook position of searcher hook.

8. WORKING RANGE AND RATED TOTAL LOAD

⚠ DANGER

- **When using the searcher hook, be sure to set searcher hook mode for moment limiter.**
- **Fall mode/option mode and searcher hook position must be set as "850kg searcher hook mode" when 850kg searcher hook is used. Searcher hook position must be displayed on moment limiter boom length window..**
- **Never use the searcher hook and the crane hook simultaneously.**

8.1 WORKING RANGE DIAGRAM FOR SEARCHER HOOK

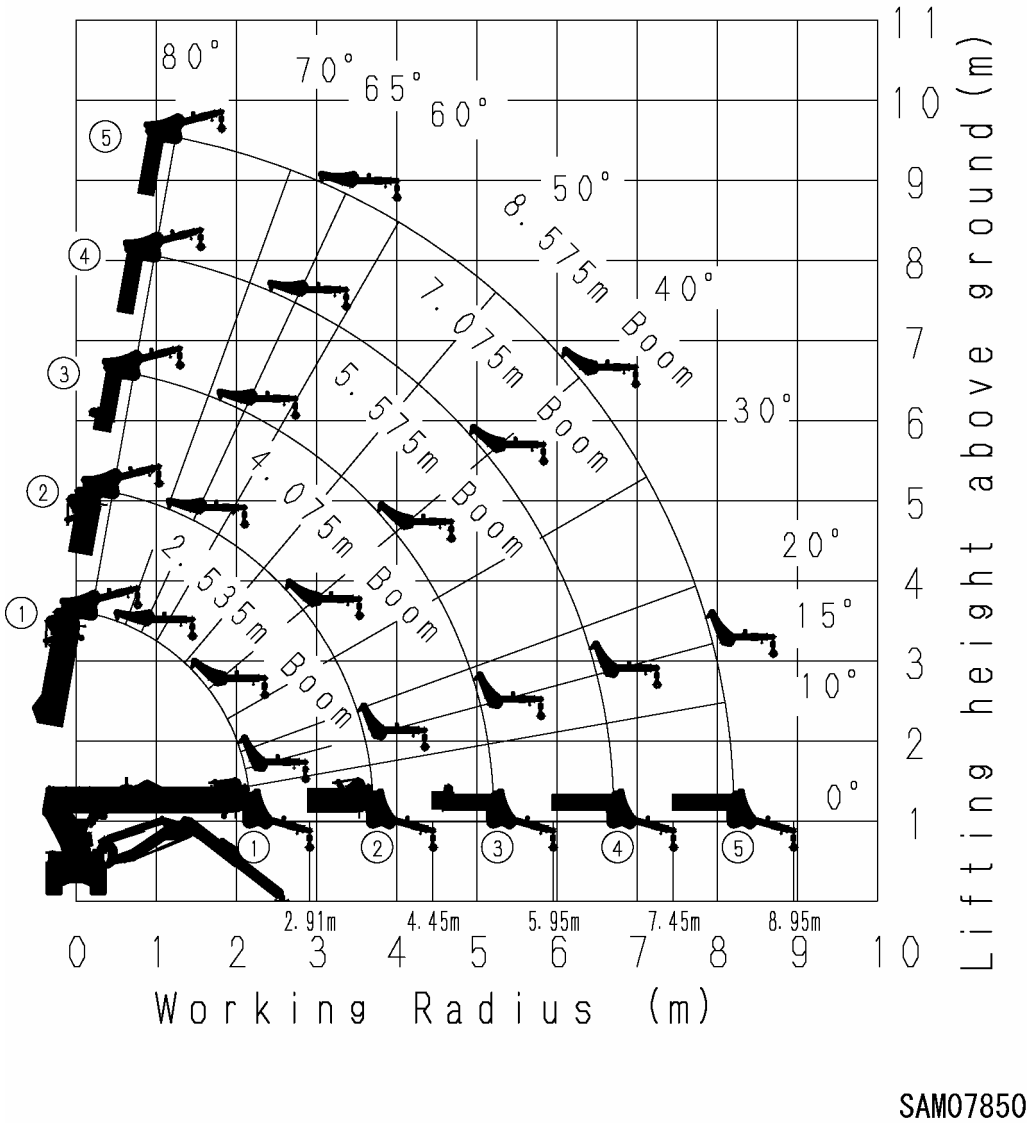

8.2 RATED TOTAL LOAD CHART FOR SEARCHER HOOK

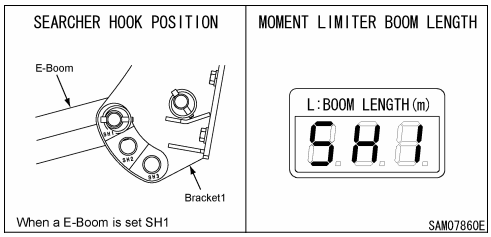

MC285C-2 RATED TOTAL LOAD CHART

850kg_Searcher Hook Mode : SH1

The unit of rated total loads are in kg.

Working Radius (m)	2.535m Boom			2.536-4.075m Boom			4.076-5.575m Boom			5.576-7.075m Boom			7.076-8.575m Boom			Working Radius (m)
	LOADED BOOM ANGLE (deg)	OUTRIGGER POSITION		LOADED BOOM ANGLE (deg)	OUTRIGGER POSITION		LOADED BOOM ANGLE (deg)	OUTRIGGER POSITION		LOADED BOOM ANGLE (deg)	OUTRIGGER POSITION		LOADED BOOM ANGLE (deg)	OUTRIGGER POSITION		
		MAX	OTHER THAN MAX		MAX	OTHER THAN MAX		MAX	OTHER THAN MAX		MAX	OTHER THAN MAX		MAX	OTHER THAN MAX	
	50.0 OR MORE	PROHIBITED AREA		50.0 OR MORE	PROHIBITED AREA		50.0 OR MORE	PROHIBITED AREA		50.0 OR MORE	PROHIBITED AREA		50.0 OR MORE	PROHIBITED AREA		
2.0	46.0	850	820													2.0
2.5	31.0	850	740													2.5
2.9	10.0	850	610	48.5	850	580										2.9
3.0				46.5	850	540										3.0
3.5				37.0	850	400										3.5
3.6				35.5	830	380										3.6
4.0				25.0	830	290	46.5	850	300							4.0
4.4				5.0	730	210	41.0	730	240							4.4
5.0							31.5	540	180	47.5	500	180				5.0
5.5							21.0	440	150	42.0	420	160				5.5
5.9							7.0	380	110	37.0	370	140	48.5	280	130	5.9
6.0										36.0	360	140	47.5	270	130	6.0
6.5										29.0	320	110	43.0	230	110	6.5
7.0										19.5	290	100	38.0	200	100	7.0
7.4										5.0	250	PROHIBITED AREA	34.0	180	PROHIBITED AREA	7.4
7.5													32.5	170		7.5
8.0													26.5	150		8.0
8.5													17.5	130		8.5
8.95													0.0	110		8.95

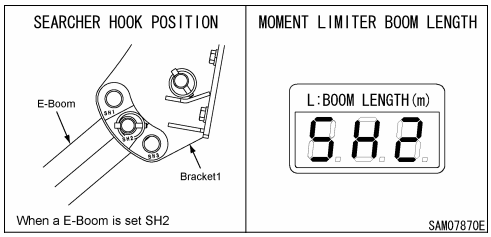

MC285C-2 RATED TOTAL LOAD CHART

850kg_Searcher Hook Mode : SH2

The unit of rated total loads are in kg.

Working Radius (m)	2.535m Boom			2.536-4.075m Boom			4.076-5.575m Boom			5.576-7.075m Boom			7.076-8.575m Boom			Working Radius (m)
	LOADED BOOM ANGLE (deg)	OUTRIGGER POSITION		LOADED BOOM ANGLE (deg)	OUTRIGGER POSITION		LOADED BOOM ANGLE (deg)	OUTRIGGER POSITION		LOADED BOOM ANGLE (deg)	OUTRIGGER POSITION		LOADED BOOM ANGLE (deg)	OUTRIGGER POSITION		
		MAX	OTHER THAN MAX		MAX	OTHER THAN MAX		MAX	OTHER THAN MAX		MAX	OTHER THAN MAX		MAX	OTHER THAN MAX	
	75.0 OR MORE	PROHIBITED AREA		75.0 OR MORE	PROHIBITED AREA		75.0 OR MORE	PROHIBITED AREA		75.0 OR MORE	PROHIBITED AREA		75.0 OR MORE	PROHIBITED AREA		
1.5	59.5	850	850	70.5	850	850										1.5
2.0	47.5	850	820	63.5	850	820										2.0
2.5	31.0	850	740	56.5	850	740										2.5
2.8	12.0	850	630	50.0	850	580										2.8
3.0				48.0	850	540	58.0	850	400							3.0
3.5				38.0	850	400	52.5	850	350							3.5
3.6				36.0	830	380	51.0	850	340	61.5	690	310				3.6
4.0				24.5	830	290	46.0	850	300	58.0	690	270	64.0	460	260	4.0
4.3				5.0	760	240	41.0	730	240	54.5	640	240	61.0	430	230	4.3
5.0							31.5	540	180	48.0	500	180	56.5	350	190	5.0
5.5							21.0	440	150	42.5	420	160	52.5	310	150	5.5
5.9							5.0	380	110	37.6	370	140	49.0	280	130	5.9
6.0										36.5	360	140	48.0	270	130	6.0
6.5										29.0	320	110	43.5	230	110	6.5
7.0										18.5	290	100	38.5	200	100	7.0
7.3										7.0	260	PROHIBITED AREA	34.0	180	PROHIBITED AREA	7.3
7.5													33.0	170		7.5
8.0													26.0	150		8.0
8.5													16.0	130		8.5
8.82													0.0	110		8.82

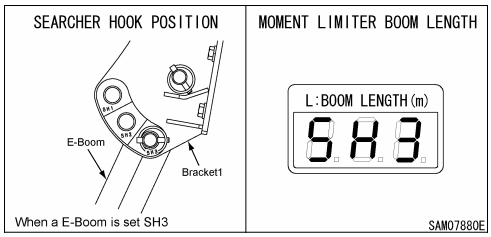

MC285C-2 RATED TOTAL LOAD CHART

850kg_Searcher Hook Mode : SH3

The unit of rated total loads are in kg.

Working Radius (m)	2.535m Boom			2.536-4.075m Boom			4.076-5.575m Boom			5.576-7.075m Boom			7.076-8.575m Boom			Working Radius (m)
	LOADED BOOM ANGLE (deg)	OUTRIGGER POSITION		LOADED BOOM ANGLE (deg)	OUTRIGGER POSITION		LOADED BOOM ANGLE (deg)	OUTRIGGER POSITION		LOADED BOOM ANGLE (deg)	OUTRIGGER POSITION		LOADED BOOM ANGLE (deg)	OUTRIGGER POSITION		
		MAX	OTHER THAN MAX		MAX	OTHER THAN MAX		MAX	OTHER THAN MAX		MAX	OTHER THAN MAX		MAX	OTHER THAN MAX	
1.5	60.0	850	850	71.5	850	850										1.5
2.0	46.5	850	820	64.5	850	820										2.0
2.5	25.0	850	740	56.5	850	740										2.5
2.6	2.0	850	700	49.5	850	580										2.6
3.0				47.5	850	540	60.0	850	400							3.0
3.5				36.0	850	400	54.0	850	350							3.5
3.6				34.0	830	380	53.0	850	340	62.0	690	310				3.6
4.0				17.5	830	290	47.5	850	300	58.0	690	270	64.0	460	260	4.0
4.1				11.0	820	270	41.5	730	240	54.0	640	240	61.0	430	230	4.1
5.0							30.0	540	180	48.0	500	180	56.5	350	190	5.0
5.5							11.5	440	150	42.0	420	160	52.5	310	150	5.5
5.6							8.0	420	140	41.0	400	140	51.5	300	140	5.6
6.0										35.5	360	140	48.0	270	130	6.0
6.5										27.0	320	110	43.0	230	110	6.5
7.0										13.0	290	100	38.0	200	100	7.0
7.1										7.0	280	PROHIBITED AREA	33.0	180	PROHIBITED AREA	7.1
7.5													32.0	170		7.5
8.0													24.0	150		8.0
8.5													10.0	130		8.5
8.61													0.0	120		8.61

1. This Rated Total Load Chart shows the maximum allowable capacities. These rated total loads are based on the machine standing level on a firm ground supporting surface, under ideal job conditions and a freely suspended load.
2. Sufficient design tolerance must be used to ensure adequate ground support surface design. The rated total loads are for static conditions only, and do not include dynamic effects of swinging , extending, retracting, lowering, raising, wind or adverse conditions. Crane users must reduce rated total loads ratings to take all conditions into account.
3. The load radius shown in the Rated Total Load Chart is based on practical working radius including boom deflection due to loading. The crane user must calculate and compensate for boom deflection as the load is lifted.
4. Deductions from Searcher Hook Rated Total Load must be made for the weight of the 850kg searcher hook (20kg), block/ball and all rigging.
5. Crane users must consult the Operators Manual for complete details about assembly, operation, maintenance, configuration, and its limitations. Modifications to the crane, other than what is specified or supplied by the original equipment manufacture, can result in a reduction of rated total load ratings.
6. This operating range chart does not include boom deflections.